Published: 11-May-2011

Four-Wheel Drive Systems -

Torque Specifications

- NOTE: *** New bolts must be fitted.**

Description	Nm	lb-ft
* Transfer case shift motor Torx bolts	25	18
* Transfer case clutch control solenoid Torx bolts	10	7
* High/Low range sensor Torx bolts	10	7

transmissionmanuals.com

Published: 11-May-2011

Four-Wheel Drive Systems - Four-Wheel Drive Systems

Description and Operation

Transfer Box Component Location

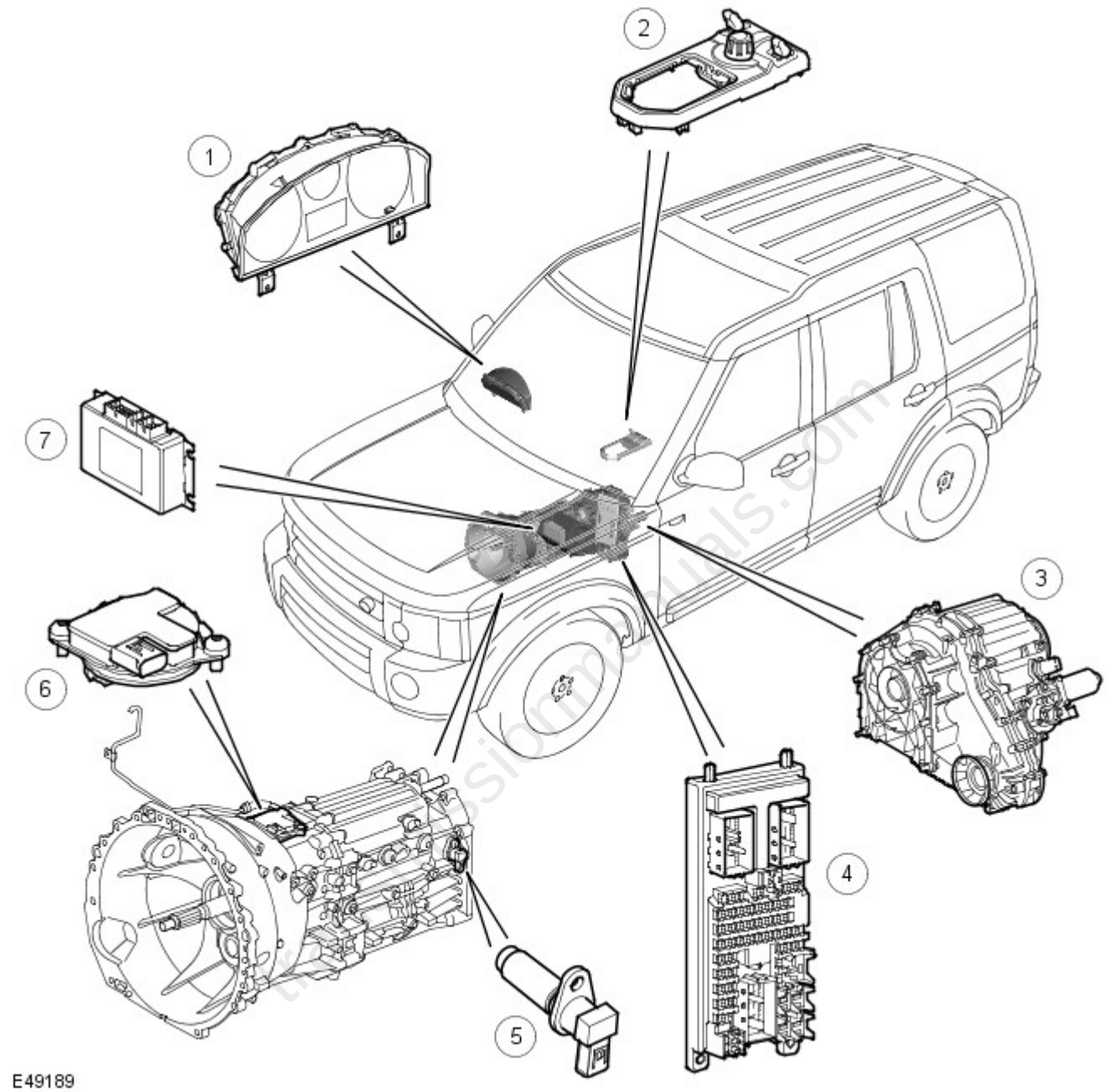

Item	Part Number	Description
1	-	Instrument cluster
2	-	Range change selection switch
3	-	Transfer box
4	-	Central junction box (CJB)
5	-	Manual transmission output shaft speed sensor
6	-	Gear position sensor (manual transmission only)
7	-	Transfer box control module

Transfer Box Exploded View

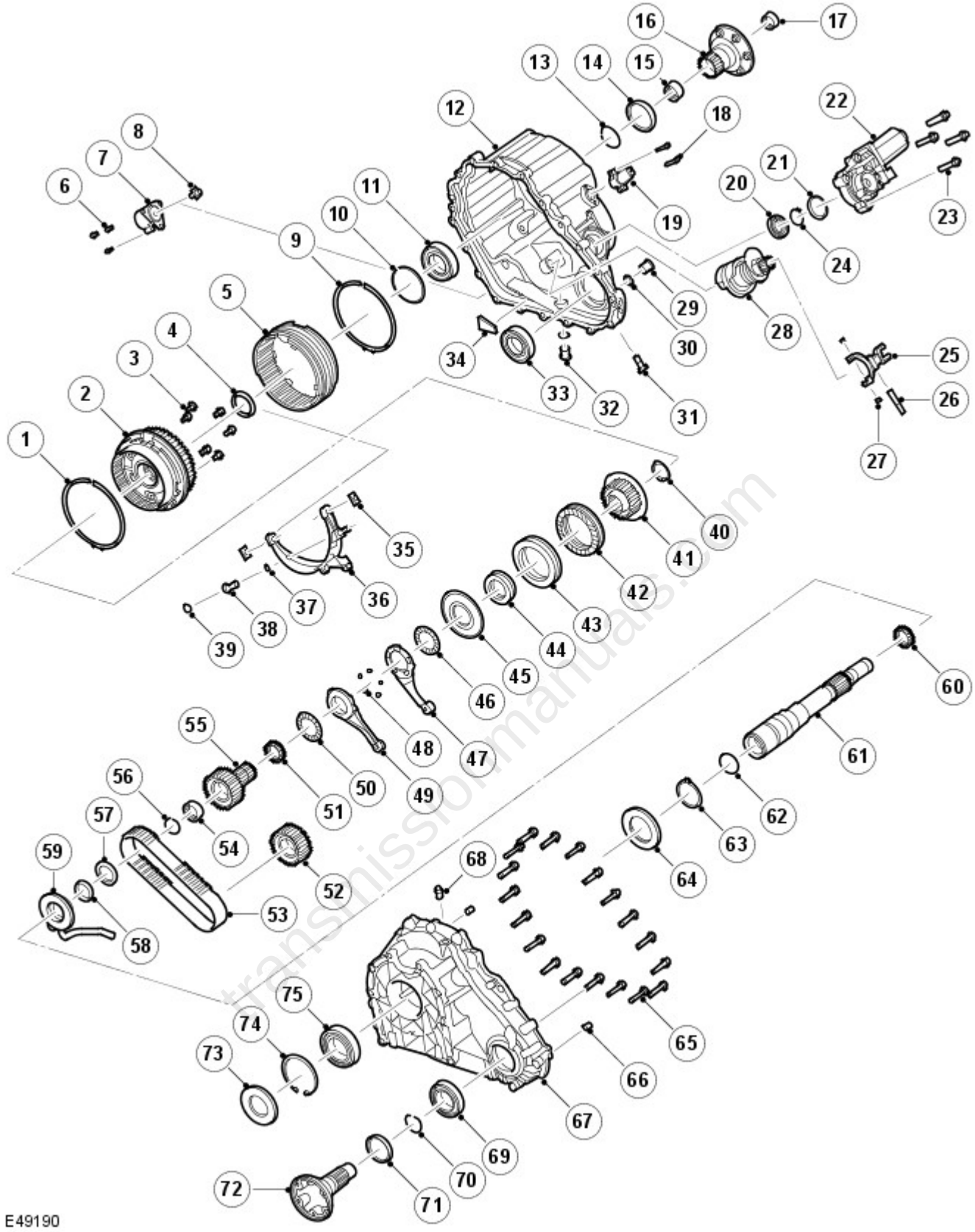

Item	Part Number	Description
1	-	Synchronisation spring
2	-	Differential assembly
3	-	Bolt, 6 off
4	-	Spacer ring
5	-	Shifting sleeve
6	-	Bolt, 3 off
7	-	Solenoid
8	-	Shifting element
9	-	Synchronisation spring
10	-	Circlip
11	-	Ball bearing

12	-	Rear housing
13	-	Circlip
14	-	Seal ring
15	-	Needle roller bearing
16	-	Rear output flange
17	-	Needle roller bearing
18	-	Bolt, 2 off
19	-	Selector fork position sensor
20	-	Bearing
21	-	Circlip
22	-	Transfer box motor assembly
23	-	Bolt, 4 off
24	-	Circlip
25	-	Shifting fork
26	-	Fork pin
27	-	Sliding block
28	-	Actuator assembly
29	-	Fill plug
30	-	Seal ring
31	-	Ball retention
32	-	Drain plug
33	-	Seal ring
34	-	Particle collector magnet
35	-	Sliding block
36	-	High/low shifting fork
37	-	O-ring
38	-	High/low fork pin
39	-	Circlip
40	-	Circlip
41	-	Clutch hub
42	-	Clutch friction plate, 10 off
43	-	Clutch steel plate, 10 off
44	-	Disc spring, 6 off
45	-	Clutch piston
46	-	Axial needle roller bearing
47	-	Transfer box motor lever assembly
48	-	Ball, 5 off
49	-	Transfer box motor lever assembly
50	-	Axial needle roller bearing
51	-	Needle roller bearing
52	-	Front output sprocket
53	-	Chain
54	-	Needle roller bearing
55	-	Sprocket
56	-	Circlip
57	-	Thrust washer
58	-	Spacer ring
59	-	Oil pump assembly
60	-	Needle roller bearing
61	-	Input shaft
62	-	O-ring
63	-	Circlip
64	-	Disc spring, 2 off
65	-	Bolt, 19 off
66	-	Dowel pin (2 off)
67	-	Front housing
68	-	Breather cartridge
69	-	Bearing
70	-	Circlip
71	-	Seal ring
72	-	Front output flange
73	-	Seal ring
74	-	Circlip
75	-	Bearing

transmissionmanuals.com

GENERAL

The DD295 transfer box is a full time, permanent four-wheel-drive unit, with 50/50 torque distribution to the front and rear driveshafts. The unit is manufactured by Magna Steyr Powertrain in Graz, Austria and supports the following features:

- Permanent four-wheel-drive with a bevel gear centre differential, providing a 50:50 torque split
- Selectable high and low range for optimum on-road and off-road performance
- Two-speed, fully synchronized 'shift-on-the-move' system allows the driver to change the range without having to stop the vehicle
- Electronically controlled multi-plate clutch providing a centre differential lock and torque biasing function to give improved traction performance and vehicle dynamic stability.

A strategy, to electronically control the centre differential multi plate clutch assembly, has been developed to provide:

- a pre-loading function, increasing locking torque with increased driving torque
- a slip controller to increase locking torque under off-road conditions and decrease locking torque for optimum comfort, e.g. parking.

The unit is located under the vehicle and is mounted on the cross-member, behind the transmission. The unit is identical for all engine derivatives.

The transfer box receives a torque input from the transmission output shaft, which is passed through the unit to two outputs for the front and rear drive shafts.

The input torque is equally distributed via a bevel gear type differential. In order to provide an optimal torque distribution to each wheel in all driving conditions, the unit is equipped with an electronically controlled locking and torque-biasing device. This device detects wheel slip via various vehicle system inputs to the transfer box control module and locks the differential accordingly. The locking torque is applied through a multi-plate clutch assembly.

A planetary gear set, located in the differential assembly, allows the driver to select high or low range whilst driving, this is known as 'shift on the move'. When in low range, the planetary gear set provides a ratio of 2.93:1, which gives the vehicle an extremely low crawl speed for off road driving and trailer towing. High range is a direct drive from the transmission output shaft and provides a 1:1 ratio.

Both the centre differential locking and biasing and the 'shift on the move' features are actuated via a DC transfer box motor, which is controlled by the transfer box control module, via a Pulse Width Modulation (PWM) signal.

Transfer Box - Sectional View

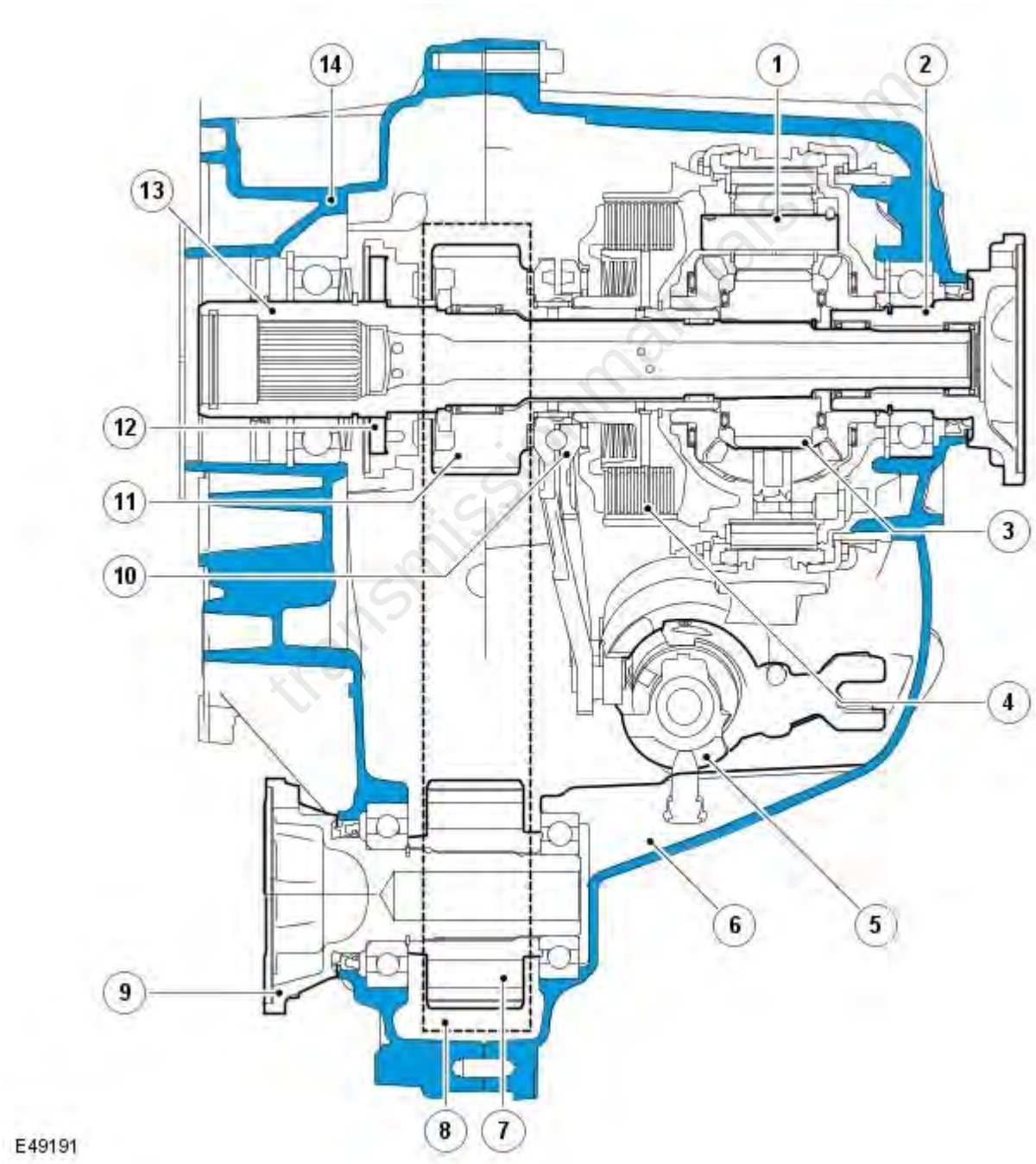

Item	Part Number	Description
1	-	Planetary gear set
2	-	Rear output flange

3	-	Centre differential assembly
4	-	Multi-plate clutch
5	-	Transfer box motor module
6	-	Rear housing assembly
7	-	Front output sprocket
8	-	Chain drive
9	-	Front output flange
10	-	Transfer box motor levers
11	-	Sprocket
12	-	Oil pump assembly
13	-	Input shaft
14	-	Front housing assembly

Transfer Box Power Flow

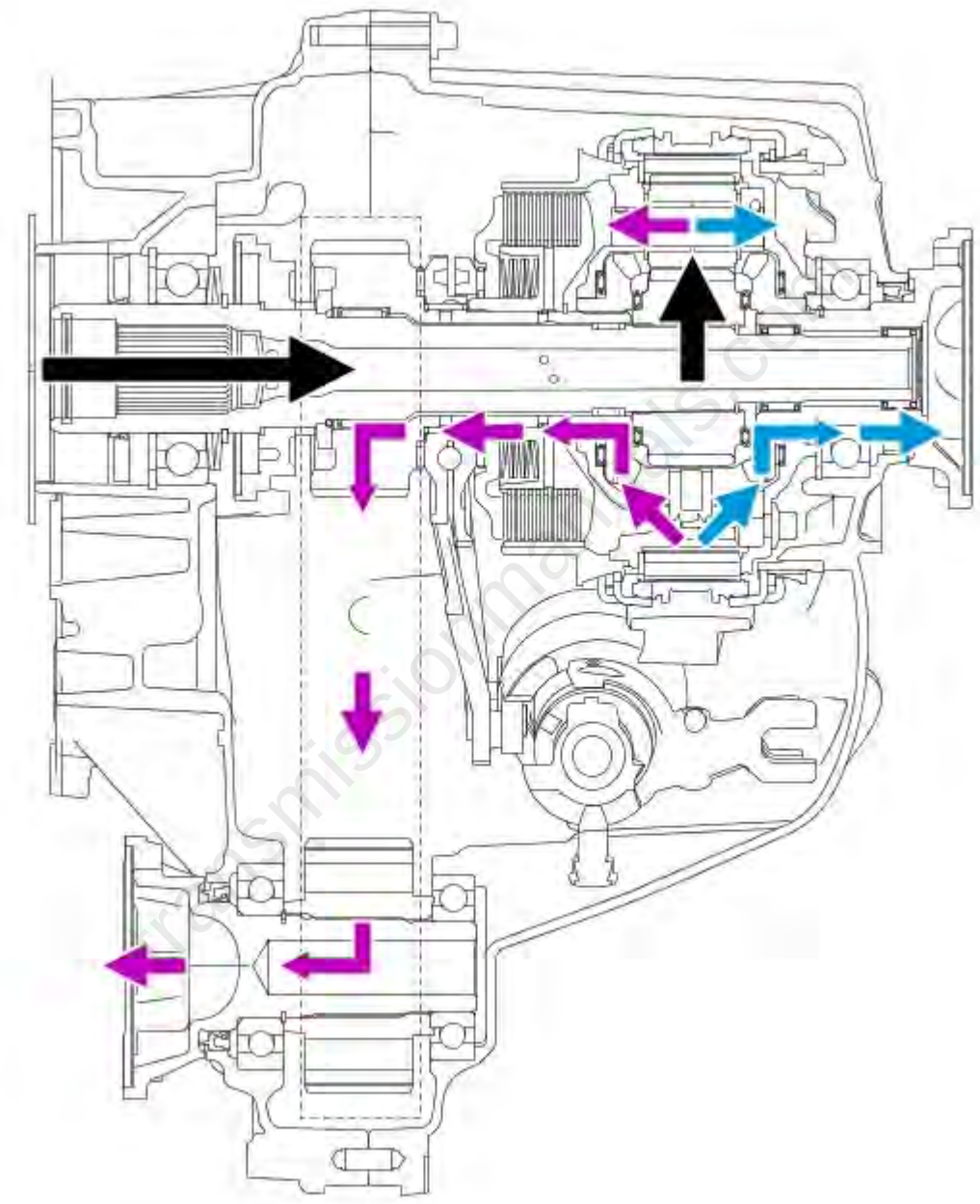

E49192

The input torque, from the transmission, is transferred to the input shaft of the transfer box and then onto the planetary sun gear and planetary pinion gears. The planetary pinion gears are held in place by the planet pinion shafts, which are connected to the differential carrier, and drive the differential pinion gears. The torque is then distributed to both the front and rear carriers, which are connected to the outputs of the transfer box. The rear carrier is connected directly to the rear output flange; the front carrier is connected to the sprocket and therefore to the chain drive, which provides the front output flange rotation.

TRANSFER BOX CASINGS

The front and rear casing assemblies are manufactured from cast aluminium.

Front Casing Assembly

The front casing assembly provides the location for the input shaft bearing and the front output flange bearing. It is also equipped with threaded holes to mount the chassis mounting bush, two lifting eyes and a breather cartridge for the transfer box breather pipe. The breather pipe allows an equalisation between atmospheric and internal transfer box pressure.

Rear Casing Assembly

The rear casing assembly provides the location for the rear output flange bearing, the transfer box motor and the oil fill and drain plug. Fins are cast into the rear casing assembly to improve the heat dissipation. The unit number is also stamped into the rear housing.

OIL PUMP

An oil pump assembly is located in the front casing to provide lubrication for the bearings and rotary components through cross-drillings in the input shaft. A flat-sectioned coupling on the input shaft drives the rotor of the pump; the stator is fixed to the front housing assembly. A tube is attached to the pump, which leads into a calm suction area at the bottom of the two casing assemblies. The collector magnet in the suction area of the pump collects any metallic debris.

CHAIN DRIVE

The chain-drive transfers drive from the centre differential to the front output flange. A 3/8" pitch chain connects the sprocket on the transfer box input shaft with the sprocket on the front output flange. As both sprockets have the same number of teeth, the rotational speed of both sprockets is identical.

TRANSFER BOX MOTOR

One motor operates both the high/low range change and the differential locking and torque-biasing device (multi-plate clutch). The motor solenoid switches between the two functions, while the motor provides the rotational movement for both operations.

Transfer Box Motor Position For Clutch Control Mode

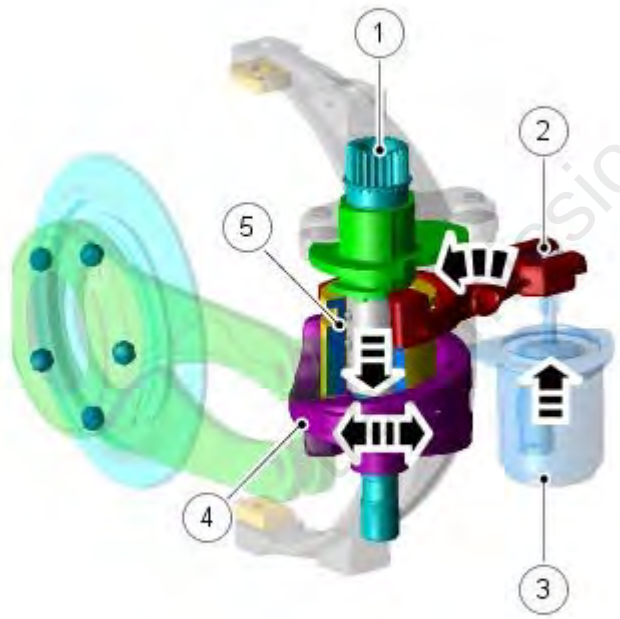

E49193

Item	Part Number	Description
1	-	Motor shaft
2	-	Solenoid shift fork
3	-	Solenoid
4	-	Clutch control disc
5	-	Shifting sleeve

To actuate the multi-plate clutch, the transfer box control module energizes the solenoid (3). The solenoid pin pivots the solenoid shift fork (2), which engages the shifting sleeve (5) into the dogteeth on the clutch control disc (4). The rotational movement of the motor shaft (1) is then linked to the clutch control disc via the shifting sleeve.

This is the normal operating mode of the transfer box. In this position, the range change function is disengaged and mechanically locked.

Transfer Box Motor Position For High/Low Range Mode

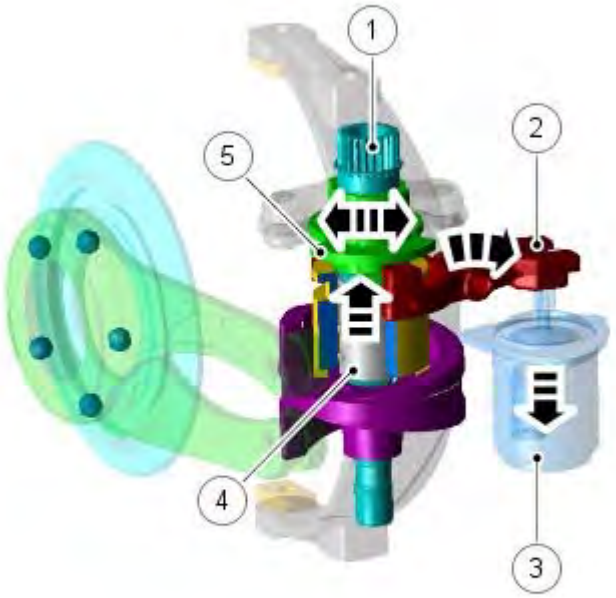

E49194

Item	Part Number	Description
1	-	Motor shaft
2	-	Solenoid shift fork
3	-	Solenoid
4	-	Shifting sleeve
5	-	Actuation cam

To actuate the high/low range change, the transfer box control module de-energizes the solenoid (3). A spring in the solenoid retracts the solenoid pin and rotates the solenoid shift fork (2). This engages the shifting sleeve (4) to the dogteeth on the high/low actuation cam (5). The rotational movement of the motor shaft (1) is then linked to the cam.

In this position, the multi-plate clutch is open, the differential cannot be locked and torque cannot be biased. Once the range change is complete the system returns to clutch control mode. In the event of an electrical failure, the motor will default to this position.

CENTRE DIFFERENTIAL ASSEMBLY

transmissionmanuals.com

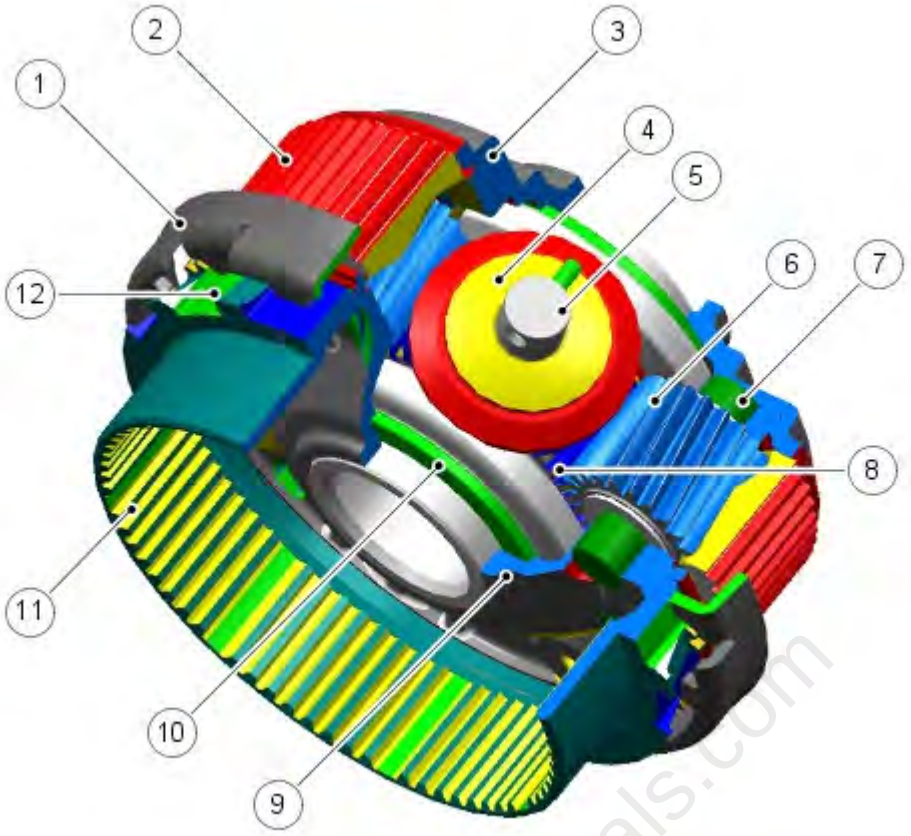

E49195

Item	Part Number	Description
1	-	Synchronisation cup and spring
2	-	Planetary ring gear
3	-	Differential carrier
4	-	Pinion gears
5	-	Pinion gear shafts
6	-	Planetary pinion gears
7	-	Planetary pinion gear shafts
8	-	Planetary sun gear
9	-	Differential cover
10	-	Differential side gears
11	-	Multi-plate clutch basket
12	-	Dogteeth

The centre differential assembly is the primary feature of the transfer box. Torque is transmitted through the centre differential carrier and distributed to the differential gears and the front and rear output flanges. The planetary gear set, for the high/low range change function, is also an integral part of the centre differential assembly.

The assembly comprises 3 differential pinion gears (4) and shafts (5), which are equally spaced within the centre differential carrier (3). The differential shafts have a rigid connection to the differential carrier. Located between the pinion gears are 3 planetary pinion gears (6) and shafts (7). The planetary sun gear (8) and two differential side gears (10) are located in the centre line of the carrier.

The planetary ring gear (2) is supported in both directions by the differential casing and the differential cover (9). The planetary ring gear is connected to a shifting sleeve, which is engaged in either high or low range.

The multi-plate clutch basket (11), which is welded to the differential casing, supports the friction plates, the dogteeth (12) for high range engagement and the synchronisation cup and spring (1) for the 'shift-on-the-move' function.

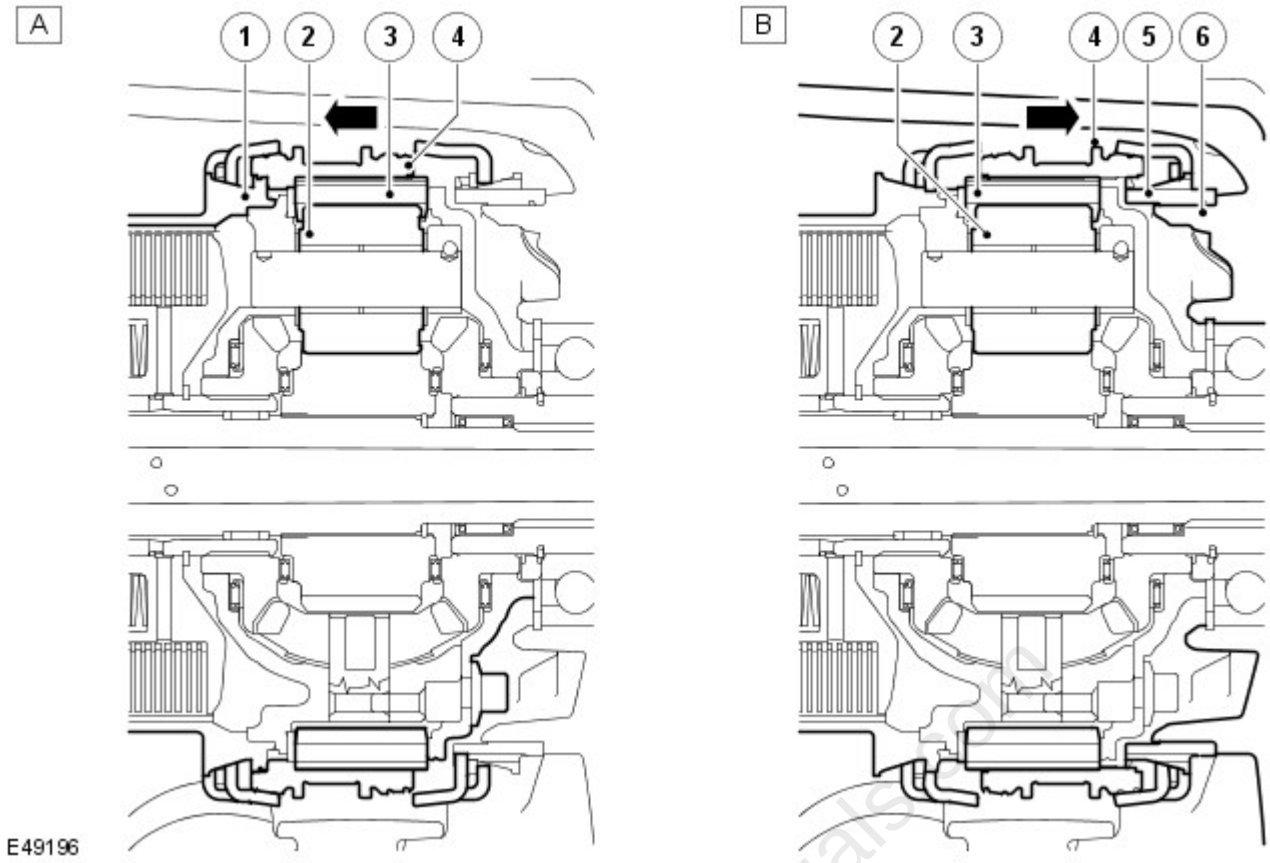

Item	Part Number	Description
A	-	High range position
B	-	Low range position
1	-	Dogteeth
2	-	Planetary pinion gears
3	-	Planetary ring gear
4	-	Shifting sleeve
5	-	Low range dogteeth
6	-	Rear carrier assembly

When high range is engaged, the shifting sleeve (4) connects to the differential carrier via dogteeth (1). The planetary ring gear (3), via the shifting sleeve, and the planetary pinion gears (5), via the planetary shafts, are also attached to the differential carrier. The planetary gear set rotates as one unit and therefore turns the differential side gear with a 1:1 ratio.

In low range the motor moves the shifting sleeve (4) in the direction of the low range dogteeth (5). The low range dogteeth, with the synchronisation cup and spring, are fixed to the rear carrier assembly (6). When the shifting sleeve is engaged with the low range dogteeth, the planetary ring gear (3), via the shifting sleeve, is stationary and the planetary pinion gears (2), via the planetary bolts, turn the differential side gears with 2.93: 1 ratio.

High range actuation sequence

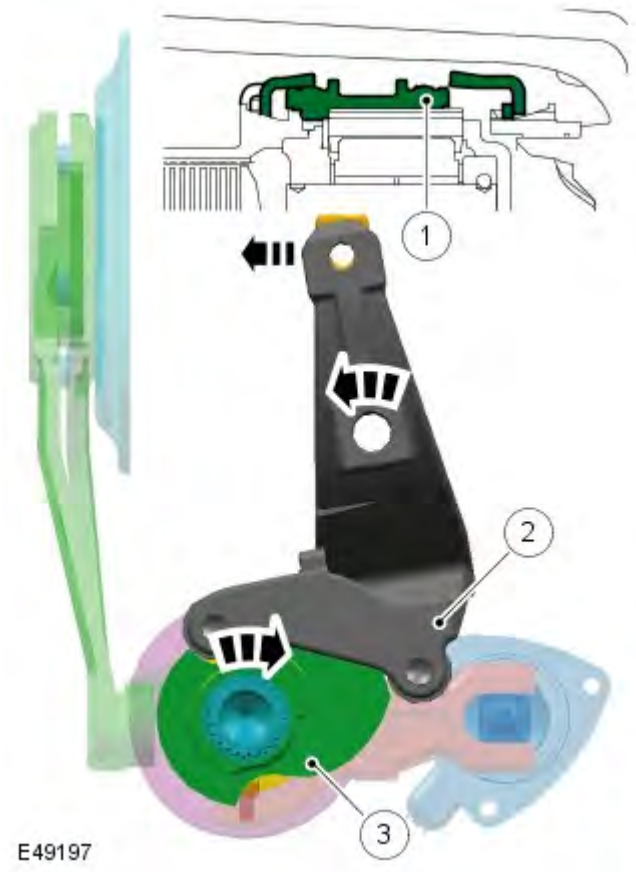

Item	Part Number	Description
1	-	Shifting sleeve
2	-	High/low shifting fork
3	-	Shifting cam

The rotational movement of the motor shaft turns the shifting cam (3) to high range position. The shifting cam then moves the shifting sleeve (1), via the high/low shifting fork (2), into the high range position. After the synchronisation sequence, the planetary ring gear is connected to the high range dogteeth, via the shifting sleeve, on the differential carrier. In this position, the input speed equals the output speed, which equates to a high range ratio of 1:1.

Low range actuation sequence

transmissionmanuals.com

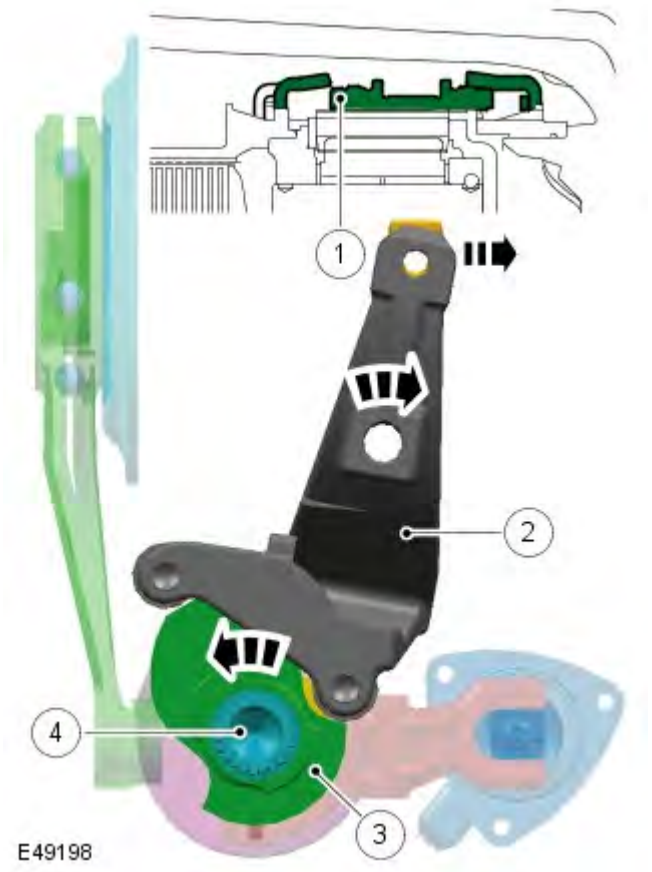

Item	Part Number	Description
1	-	Shifting sleeve
2	-	High/low shifting fork
3	-	Shifting cam
4	-	Motor shaft

The rotational movement of the motor shaft (4) turns the shifting cam (3) into low range position. The shifting cam then moves the shifting sleeve (1) of the centre differential assembly via the high/low shifting fork (2) into low range position. After the synchronisation sequence, the planetary ring gear is connected to the low range dogteeth, via the shifting sleeve, on the rear carrier assembly. The output speed is then reduced to a ratio of 2.93:1.

MULTI-PLATE CLUTCH ASSEMBLY

transmissionmanuals.com

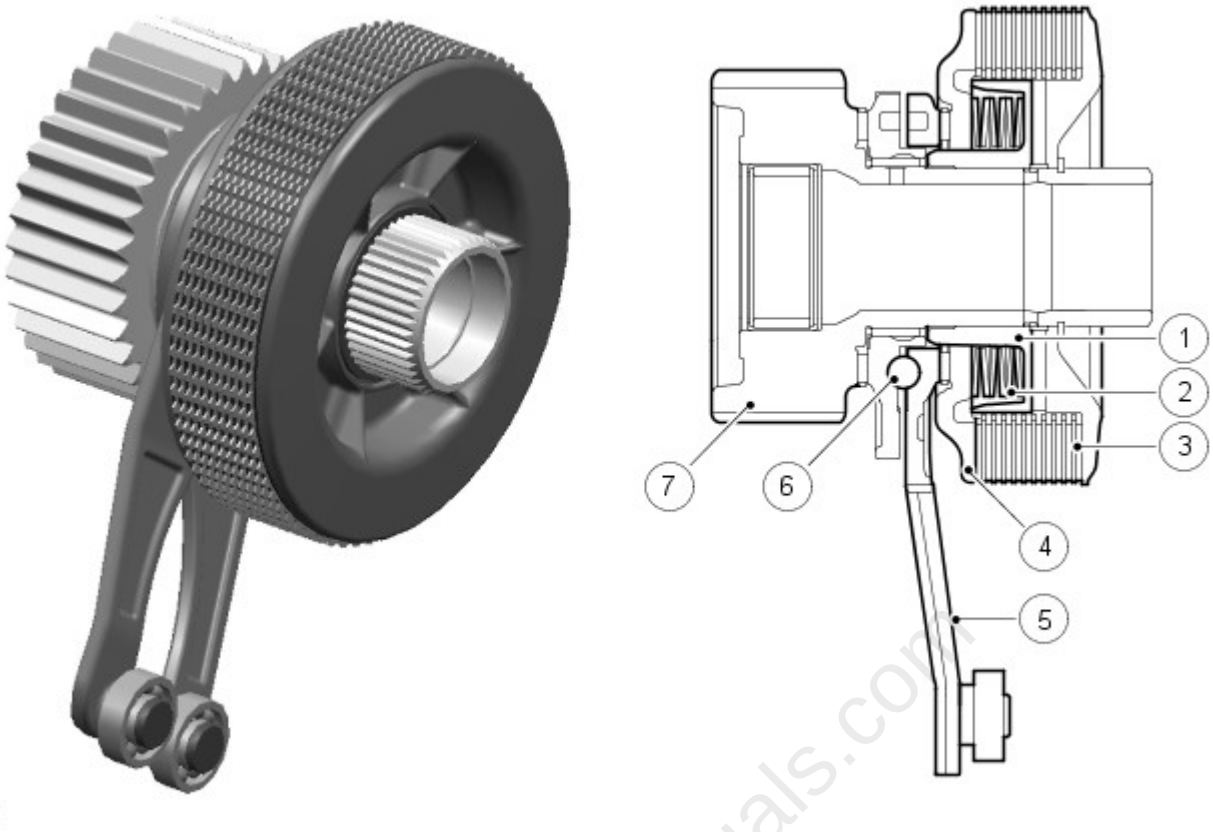

E49199

Item	Part Number	Description
1	-	Clutch hub
2	-	Cup springs
3	-	Clutch plates
4	-	Clutch piston
5	-	Motor levers
6	-	Ball ramp mechanism
7	-	Sprocket

The multi-plate clutch assembly for both centre and rear differentials act in a similar way. The aim of the multi-plate clutch assembly is to prevent excessive differential slip and therefore maximise the traction performance of the vehicle. This is fundamentally different from the 'braked' traction control, which can only counter act differential slip when it occurs.

A certain amount of differential slip is required to allow the vehicle to turn corners and to remain stable under control of the Anti-lock Braking System (ABS). The transfer box control module monitors the driver's demands through primary vehicle controls and automatically sets the slip torque at the differentials. The system is completely automatic and does not require any special driver input.

The multi-plate clutch assembly actively controls the torque flow through the centre differential and optimises the torque distribution in the driveline. The clutch assembly biases the torque from the transmission to the axle and wheels with the higher grip and prevents the wheels with the lower grip from spinning.

The multi-plate clutch assembly comprises the sprocket (7), which is connected to the front differential side gear, the motor levers (5) with the ball ramp mechanism (6), the clutch hub (1) as support for the clutch plates (3), the clutch piston (4) to generate friction between the clutch plates, and a pack of cup springs (2) to return the clutch piston into its original position.

One set of friction plates are connected to the clutch hub; the other set of friction plates are connected to the multi-plate clutch basket, which is welded to the centre differential housing.

Multi-plate Clutch Actuation

Transfer box motor levers in initial position, multi-plate clutch open condition

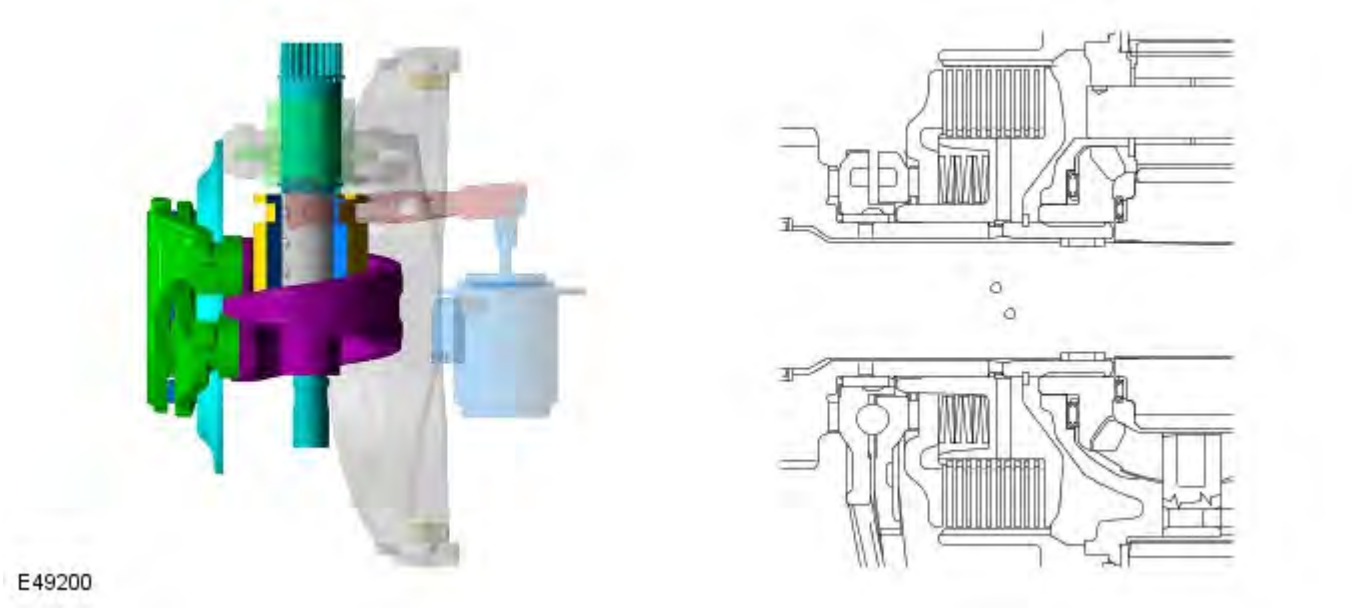

Transfer box motor in end position, multi-plate clutch closed condition

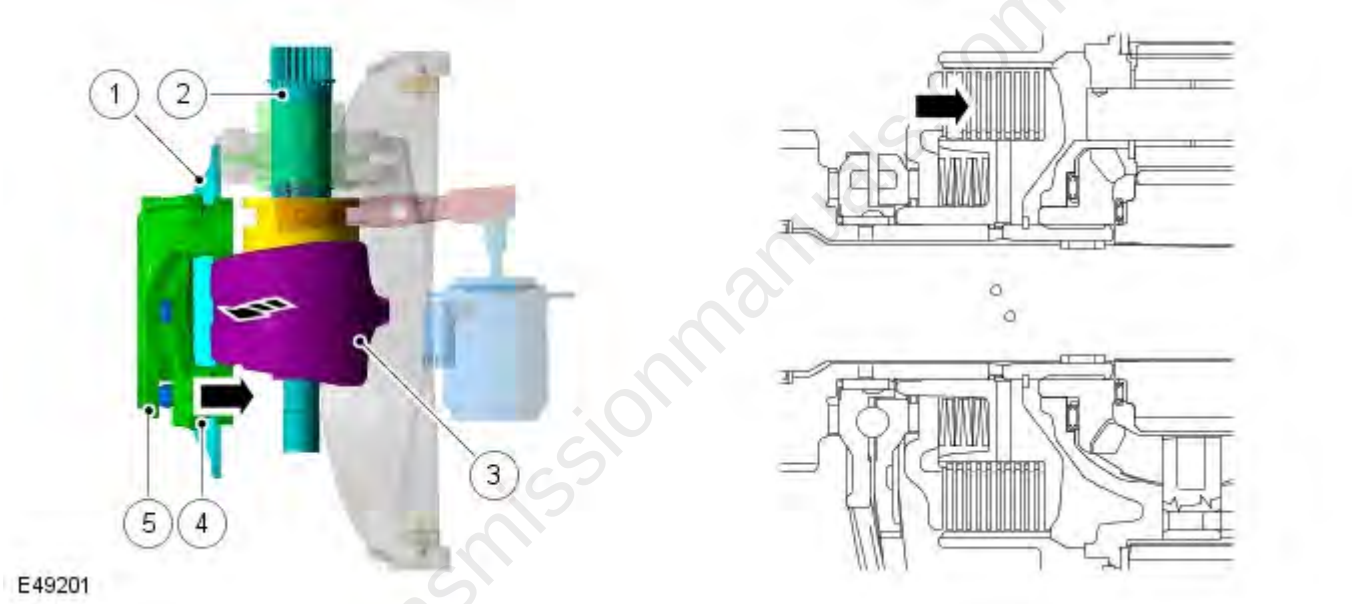

Item	Part Number	Description
1	-	Clutch piston
2	-	Motor shaft
3	-	Clutch control disc
4	-	Motor levers
5	-	Ramp mechanism balls

By turning the clutch control disc (3), via the motor shaft (2), the motor levers (4) are rotated relative to each other. This relative movement acts on 5 balls (5) in a ramp mechanism between the two levers and give a defined axial movement. The movement forces the clutch piston (1) to induce friction between the plates supported by the clutch hub and the plates supported by the clutch basket on the differential carrier. This frictional force inhibits the differential rotation; the differential carrier and front differential side gear are locked together.

TRANSFER BOX CONTROL MODULE

The transfer box control module controls the high/low 'shift-on-the-move' actuation and the multi-plate clutch actuation. The control module is located in the E-box, next to the Engine Control Module (ECM), behind the battery in the engine compartment. The position of the control module changes with LH and RH drive vehicles.

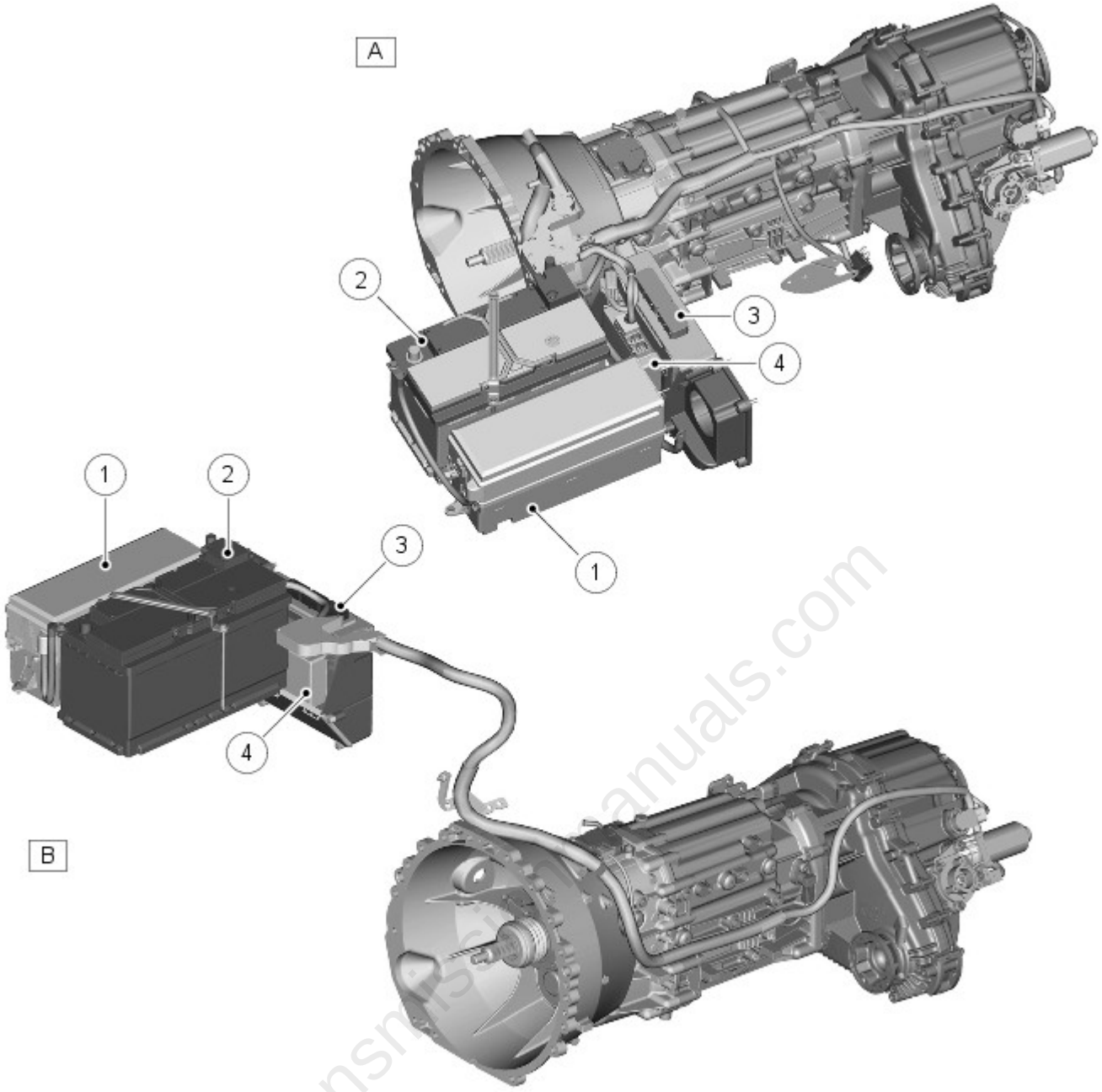

E49202

Item	Part Number	Description
A	-	RH drive
B	-	LH drive
1	-	Battery Junction Box (BJB)
2	-	Battery
3	-	Engine Control Module (ECM)
4	-	Transfer box control module

The control module is connected to the Controller Area Network (CAN) bus and controls the transfer box operation using CAN messages from other control modules on the network.

The control module memorises the position of the transfer box motor when the ignition is switched off.

The transfer box control module uses the same actuator to control both range change function and application of centre differential locking torque. The module uses position feed back from the actuator to provide smooth range changing capability and graduated application of locking torque appropriate for the current driving conditions. Range change can be carried out while moving providing the transmission is in neutral and the vehicle is below the speed necessary for the requested range change.

The control module uses three connectors for all inputs and outputs. It receives a permanent power supply via a 30A fusible link located in the Battery Junction Box (BJB), and an ignition supply via fuse 24 in the Central Junction Box (CJB).

The control module uses a series of programmed shift maps to control the synchronisation speed and ensure that a maximum shift time of approximately one second is achieved.

If the control module is replaced, T4 must be connected to the vehicle and the transfer box control module self-calibration procedure must be performed. This procedure must also be performed if the transfer box motor assembly is replaced.

Default/Limp-home Strategy

If a fault occurs with the transfer box, the transfer box control module or one of the required input signals i.e. road speed signal, the control module records an error code and will respond appropriately to provide the highest level of system capability under the specific fault conditions. The following fault states are possible:

Fault state	System response	Driver warning
No reduction in capability	Diagnostic Trouble Code (DTC) will be recorded but no effect on performance	Non
Clutch control not possible. Temporary over temperature condition	The tractive capability of the vehicle, off road, is reduced.	Driveline over temperature warning lamp or "CENTRE DIFF OVER TEMP REDUCE SPEED" on message centre
Clutch control not possible. Permanent fault	The tractive capability of the vehicle, off road, is reduced.	Driveline fault warning lamp or "CENTRE DIFF FAULT TRACTION REDUCED" on message centre
Range change not possible	The system inhibits the driver from making a range change	Driveline fault warning lamp or "TRANSMISSION RANGE CHANGE NOT AVAILABLE" on message centre
Stuck in Transfer box neutral	The transfer box is stuck between high and low range resulting in no drive to wheels	Flash low range indicator plus "APPLY HANDBRAKE (PARK BRAKE in USA and Canada)". The message will only display at times when it is deemed safe or necessary. It will not display during normal driving for example.

If a driveline over temperature condition has occurred, after the driveline has been allowed to cool, clutch control will be re-enabled and the warnings will disappear. There is no need to seek service assistance following an over temperature event.

If clutch control or Range change is not possible due to a permanent fault the driver must seek service assistance at the earliest opportunity.

If the system suffers a fault, which causes the transfer box to fail in neutral, the control module is designed to continue attempting to engage the requested range or return to its original range for a fixed number of attempts. If this has not been successful and the low range lamp is still flashing the driver should bring the vehicle to a halt and attempt the range change again while stationary. If this does not work after a number of attempts, key off for 30 seconds, restart engine and request range change again while stationary. The driver must seek service assistance at the earliest opportunity.

Transfer Box Control Module Pin Out Details

Connector 1-C1319

Pin No.	Description	Input/output
1	Not used	-
2	Not used	-
3	CAN bus low	Data (input and output)
4	Range change selection switch - High	Input
5	Range change selection switch - Low	Input
6	CAN bus high	Data (input and output)
7	Key interlock solenoid	Output
8	LED-high	Output
9	LED-low	Output

Connector 2-C1854

Pin No.	Description	Input/output
1	CAN bus low	Data (input and output)
2	Not used	-
3	Ignition power supply	Input
4	CAN bus high	Data (input and output)
5	Ground	-
6	Permanent battery power supply	Input

Connector 3-C1855

Pin No.	Description	Input/output
1	Hall sensor signal-A (directional)	Input
2	Hall sensor ground	-
3	Hall sensors supply	Output
4	Not used	-
5	Temperature sensor	Input
6	Hall sensor signal-B (speed)	Input
7	Selector position ground	-
8	5V position sensor supply	Output
9	Selector mode solenoid ground	-
10	Selector position sensor signal	Input
11	Transmission position sensor X axis signal	Input
12	Selector mode solenoid power supply	Output
13	Transmission position sensor Y axis signal	Input
14	Manual transmission output shaft speed sensor supply	Output
15	Motor supply/ground	Input/output
16	Manual transmission output shaft speed signal	Input
17	Manual transmission output shaft speed sensor ground	-
18	Motor supply/ground	Input/output

TRANSFER BOX CONTROL MODULE INPUTS

The transfer box control module receives the following inputs:

- Range change selection switch

transmissionmanuals.com

- High/low position sensor
- Transfer box actuator motor temperature
- Transfer box actuator motor position sensor
- CAN bus messages
- Gear position sensor (manual transmission only)
- Transmission output shaft speed sensor (manual transmission only).

CAN Bus Messages

The CAN bus is a high speed broadcast network connected between various vehicle control modules. The CAN network carries an extensive list of messages between the different control modules enabling more sophisticated control with reduced complexity. Data on the network is packaged for efficient communication and prioritised according the urgency and importance of the Messages. The bus comprises two wires, which are twisted together to minimise electromagnetic interference (noise) produced by the CAN messages.
For additional information, refer to: Communications Network (418-00, Description and Operation).

The transfer box control module is connected on the CAN bus and controls transfer box operation using CAN messages from other control units on the network. Wheel speed, vehicle acceleration, engine torque and speed, gear information, from the automatic transmission, temperature information, car configuration, axle ratios and Terrain Response™ mode inputs, are some of the main signals received by the control module.

In the event of a CAN bus failure the following symptoms may be observed:

- Shift from high to low or low to high inoperative
- Instrument cluster low range warning lamp inoperative
- warning messages or lamps displayed in instrument cluster.

Gear Position Sensor (Manual Transmission Only)

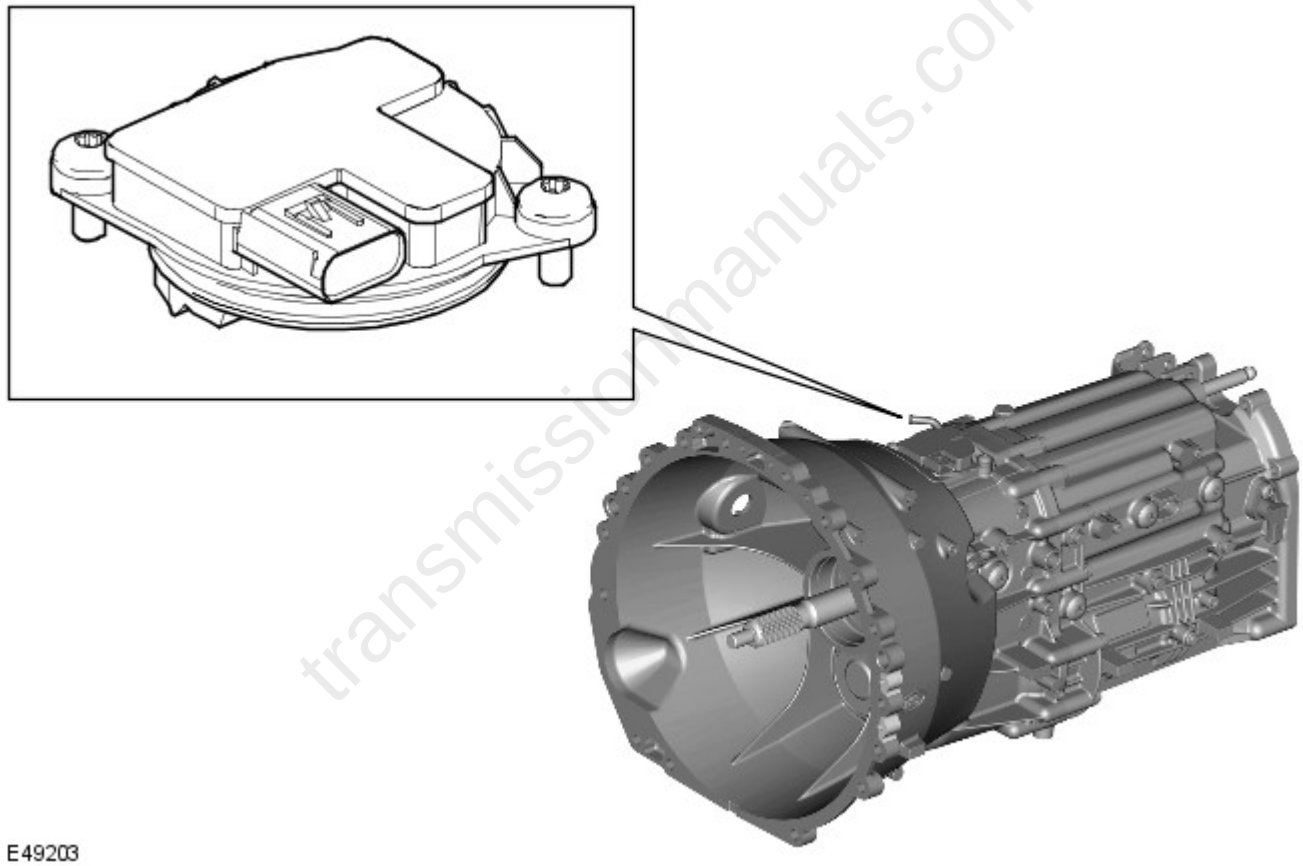

E49203

transmissionmanuals.com

The transfer box control module uses positional information from the manual gear position sensor to determine which gear the transmission is in. This information is broadcast on the CAN bus for display on the instrument cluster and for use by other vehicle systems. Vehicles fitted with automatic transmission use a similar message broadcast by the Transmission Control Module (TCM). Vehicles fitted with manual transmission have a learning function, which compares the positional information from the sensor with the gear ratio calculated from the ratio of engine speed to transmission output shaft speed. The transmission learning is carried out at end of manufacture. If a new transmission is fitted during the life of the vehicle the learning algorithm needs to learn the characteristics of the new transmission.

The instrument cluster displays the selected gear as determined by the transfer box. The transfer box also uses this to check the vehicle is in neutral before attempting a range change.
For additional information, refer to: Manual Transmission (308-03 Manual Transmission/Transaxle - TDV6 2.7L Diesel, Description and Operation).

Manual Transmission Output Shaft Speed Sensor

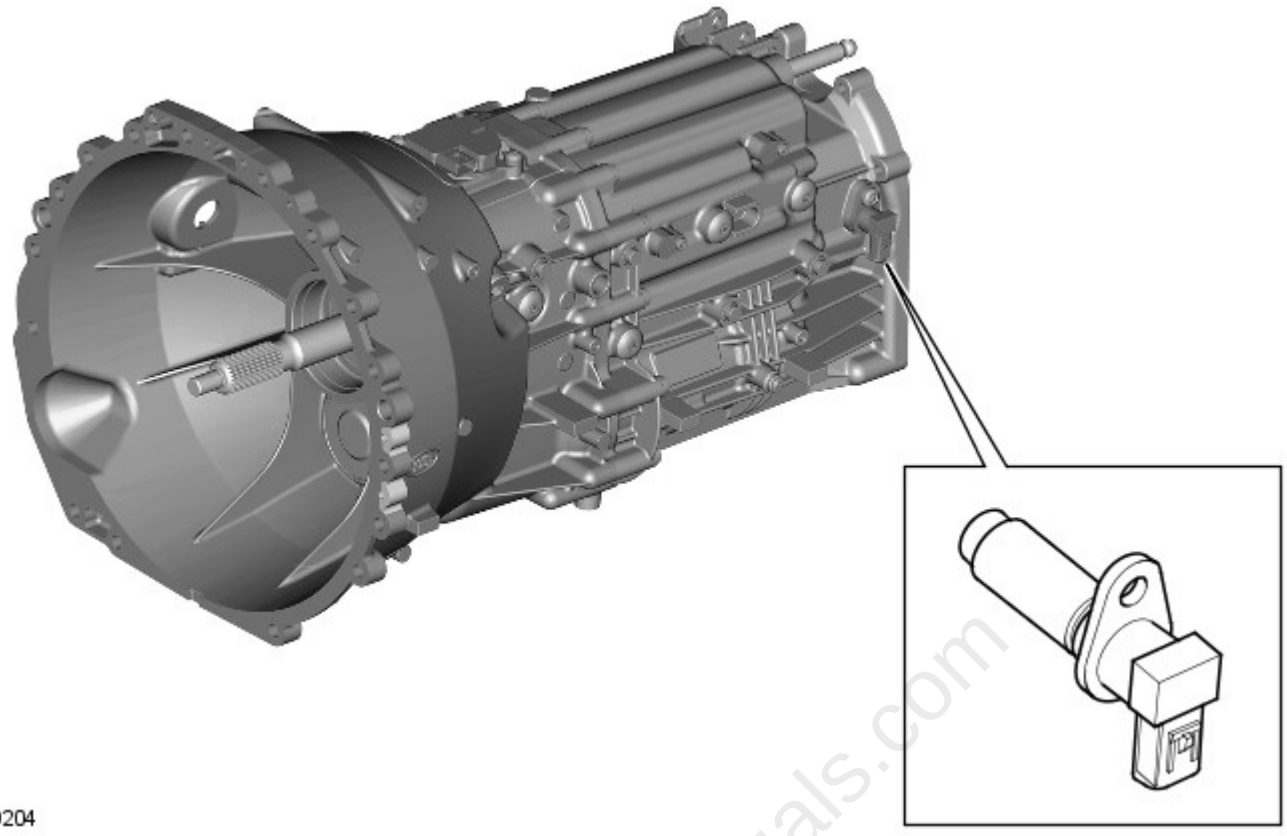

E49204

The output shaft speed sensor is located at the rear of the transmission and measures the speed of the transmission output shaft.

The transfer box is designed to allow range changes when the vehicle is moving, providing the transmission speed complies with the preset thresholds determined by the control module. The control module calculates the optimised synchronization timing through the speed of the transmission output shaft and the wheel speed of the vehicle.
For additional information, refer to: Manual Transmission (308-03 Manual Transmission/Transaxle - TDV6 2.7L Diesel, Description and Operation).

Range Change Selection Switch

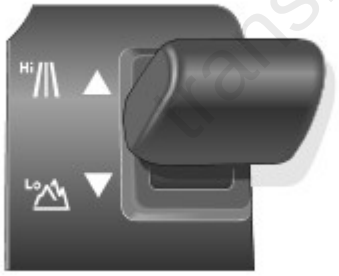

E49205

The range change selection switch in located behind the main transmission selection lever, in the centre console. The switch is a 3-position momentary action centre sprung device. The driver pushes the lever forward to select high range and back to select low range.

The switch comprises a housing, which provides the location for a sliding contact. When the switch is moved to the high or low position, it completes a momentary connection to 12V with one of two micro-switches located at each end of the range change selection switch. These micro-switches correspond to the high or low range positions.

The transfer box control module receives this momentary signal and selects the requested range.

In this position, a spring will move the selector lever to the centre position when released.

High/Low Position Sensor

transmissionmanuals.com

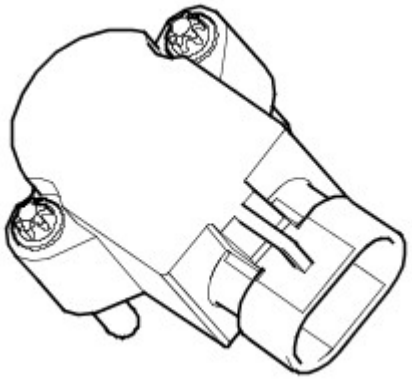

E49209

The high/low position sensor converts the pivotal movement of the high/low fork into a PWM signal on the input. The PWM signal of the position sensor differs between high range and low range. The control module checks this signal and informs the driver, via the instrument cluster and the range change selection switch LED's, if a range change is in progress or has been completed.

The high/low position sensor is connected to the transfer box control module via a three-pin connector.

TRANSFER BOX CONTROL MODULE OUTPUTS

The transfer box control module sends the following outputs:

- CAN bus messages
- Key interlock solenoid
- High/low range change LED
- Transfer box motor
- Solenoid.

CAN Bus Messages

The control module also sends messages via the CAN bus to tell other control modules on the network, the status of the transfer box. The high/low status, clutch torque and default mode status are some of the main signals sent out by the transfer box control module.

Key Interlock Solenoid

The transfer box control module is able to send a signal to the key interlock solenoid. This signal locks the key in the ignition barrel to prevent it from being removed if the automatic transmission is not in the 'Park' position.

High/Low Range Change LED

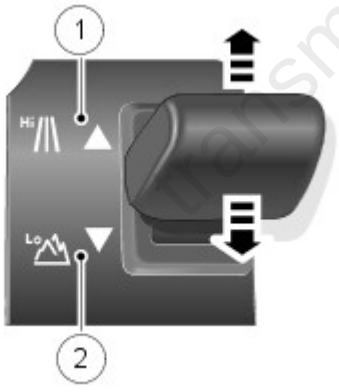

E49206

Item	Part Number	Description
1	-	High range LED
2	-	Low range LED

The control module is responsible for illuminating the 2 'high/low' range change LED's adjacent to the range change lever. One LED indicates high range and the other indicates low range.

One LED will be on continuously when in the corresponding range.

When changing range, the current range LED will remain on until the new range status has been achieved.

The new range LED will start flashing only when the range change has commenced (i.e. speed and neutral conditions have been met). The new range LED will be illuminated continuously at the same instant that the current range (now the old range) LED turns off.

The flash rate is 2 Hz with a 50% duty cycle.

The LED's have 2 levels of intensity, high when the vehicle lights are switch off and low when they are switched on.

transmissionmanuals.com

If both lights are flashing at 0.5 Hz, this would indicate a transfer box fault or that the transfer box is in undefined range and may require calibration.

Transfer Box Motor

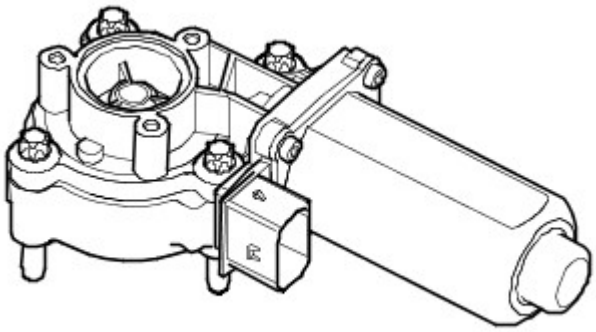

E49207

The transfer box motor provides the necessary movement to perform the high/low range change and the multi-plate clutch actuation. The motor is located on the rear casing assembly and secured with four bolts.

The motor is a PWM controlled, DC motor with an integrated worm gear reduction drive. It is connected to the transfer box control module with an eight-pin connector; the power supply of the motor is maintained through two large diameter cables on the motor connector. An internal position sensor checks the rotational movement of the motor.

There is an temperature sensor located within the motor housing.

Solenoid

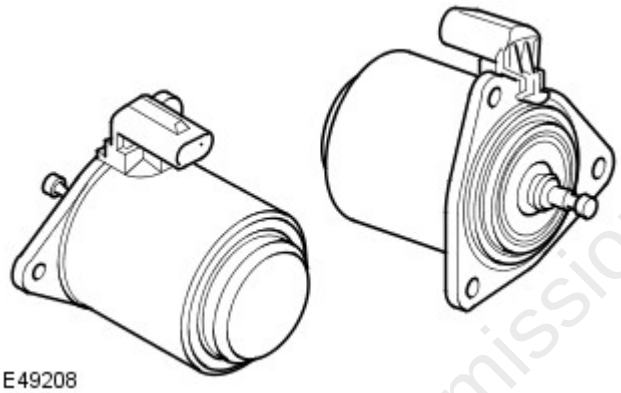

E49208

The solenoid switches the power flow on the actuation system between high/low range change mode and clutch control mode. When the solenoid is energized, the solenoid pin deploys and activates the clutch control mode. When the solenoid is de-energized, the internal spring rejects the solenoid pin and activates the high/low range change mode.

• NOTE: In order to replace the solenoid in service, the solenoid must be energized using the diagnostic tool.

The solenoid is connected to the transfer box control module with a two-pin connector.

Status Indication

Instrument Cluster

transmissionmanuals.com

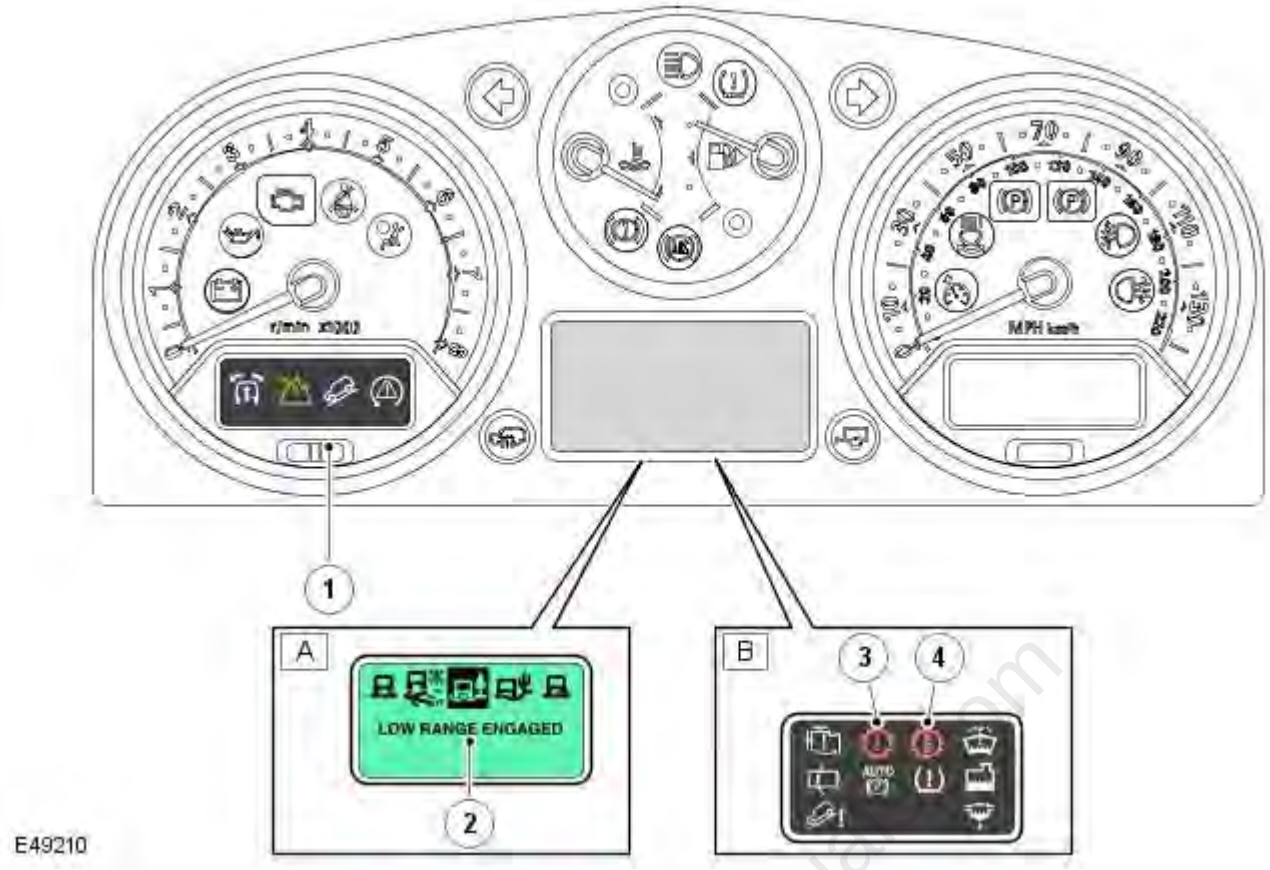

Item	Part Number	Description
A	-	High-line instrument cluster
B	-	Low-line instrument cluster
1	-	Low-range status indicator
2	-	Message centre text (high-line only)
3	-	Driveline fault lamp
4	-	Driveline over temperature

On vehicles fitted with the high line instrument cluster there will be one low range status indicator. This indicator will take the form of a mountain symbol and has the following logic:

- Lamp on = low range
- Lamp off = high range
- Lamp flashing = range change in progress/range undefined/range fault.

There will also be a message displayed in the message centre, on vehicles with high-line instrument cluster, which will inform the driver of any faults with the transfer box.

The following table shows the messages that can be displayed in the message centre of a high-line instrument cluster relating to the transfer box:

Message	Description	Chime
'LOW RANGE ENGAGED'	Transfer case has engaged low range after a range change request	Single
'HIGH RANGE ENGAGED'	Transfer case has engaged high range after a range change request	Single
'SPEED TOO HIGH FOR RANGE CHANGE'	Range change request when vehicle speed too high	Single
'SELECT NEUTRAL FOR RANGE CHANGE'	Range change request when lever not in neutral	Single
'APPLY HANDBRAKE' (PARK BRAKE in USA and Canada)	This alerts the driver that the automatic transmission park lock function is inoperative due to transfer box out of high or low range. Transfer box control module has stopped transmitting on the CAN bus during a range change or while in neutral mode and as a result the automatic transmission park lock function is inoperative	One per second for three seconds
'TRANSMISSION RANGE CHANGE NOT AVAILABLE'	Transfer box has detected a fault inhibiting a new range change. Control unit has shut down due to thermal overload	Single
'CENTRE DIFF OVER TEMP REDUCE SPEED'	Centre differential temperature is approaching the over heated threshold	Single
'CENTRE DIFF FAULT – TRACTION REDUCED'	Centre differential has failed - operating as an open differential	Single
'CENTRE DIFF FAULT – TRACTION REDUCED'	Transfer box control module has stopped transmitting on the CAN bus and defaults to open centre differential	Single

The transfer box control module receives a gear position signal from the manual transmission gear position sensor and publishes the status on the CAN bus. This is displayed in the odometer display, similar to how the automatic transmission displays gear information.

Odometer Display	Description

Odometer Display	Description
N	Transmission is in neutral
1	Transmission is in first gear
2	Transmission is in second gear
3	Transmission is in third gear
4	Transmission is in forth gear
5	Transmission is in fifth gear
6	Transmission is in sixth gear
R	Transmission is in reverse gear (Japan only)
Blank display	Transmission is between neutral and a gear
E	Transmission gear position sensor has a fault

On vehicles fitted with the low line instrument cluster, in place of the message centre there will be a status lamp, which has the following logic:

- Amber - Over temperature
- Red - Failure, stop vehicle

The following table shows the faults that could possibly illuminate the transfer box status lamp on vehicles fitted with the low-line instrument cluster:

Indication	Description
OFF	Transfer box is operating at normal working temperature
YELLOW WARNING LAMP ON	Transfer box temperature is approaching the over heated threshold
YELLOW WARNING LAMP ON	Transfer box has detected a fault, which affects the range change function (current range is still maintained) or the centre differential has failed to open.
RED WARNING LAMP ON	Transfer box has detected a fault which renders the transmission park lock function inoperative due to out of range condition, OR centre differential has failed with a non-zero locking torque
YELLOW WARNING LAMP ON	Transfer box control module has stopped transmitting on the CAN bus and defaults to open centre differential
RED WARNING LAMP ON	Transfer box control module has stopped transmitting on the CAN bus during a range change or while in neutral mode and as a result the automatic transmission park lock function is inoperative

SERVICE

Basic Dimensions (Millimetres)

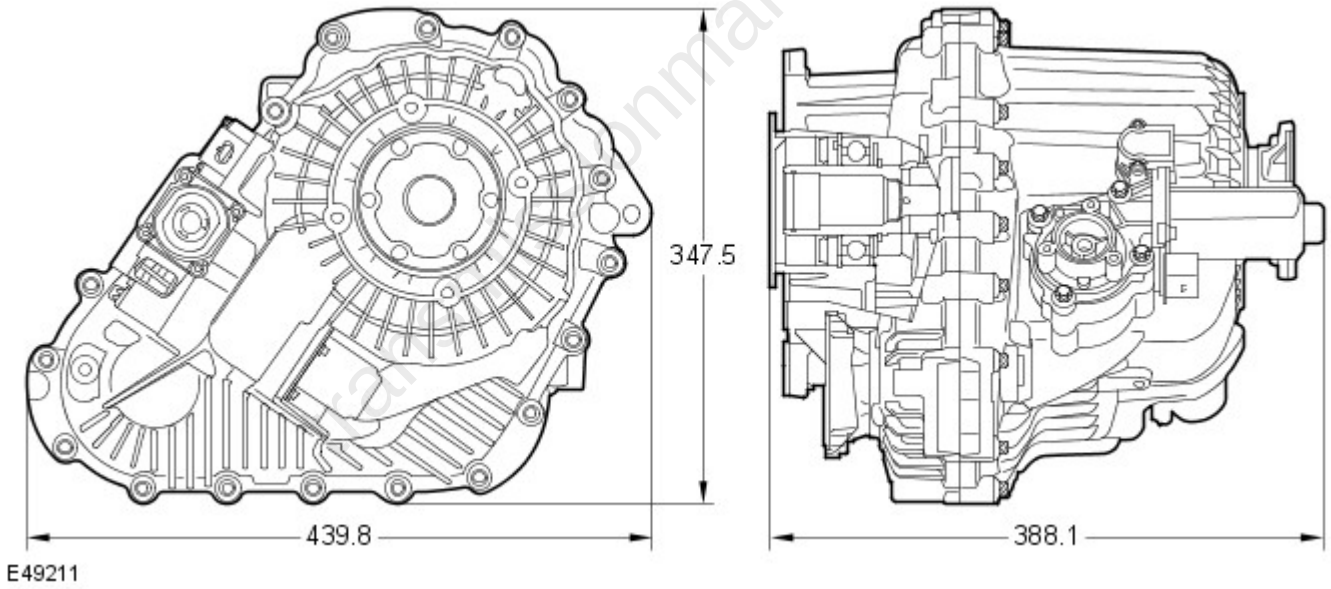

The transfer box weighs 40.30 kg without oil and 41.55 kg with oil. The unit requires 1500 ml ± 2% of oil from empty.

The oil used in the transfer box is Shell TF 0753, which has been specially developed by Magna Steyr and Shell. The oil contains unique additives, which enhance the transfer box operation. No other oil must be used in the transfer box.

There is a unique type of grease, Weicon anti-seize montagepaste grau TL 7391, that needs to be applied the units input shaft spline when installing or reinstalling the transfer box.

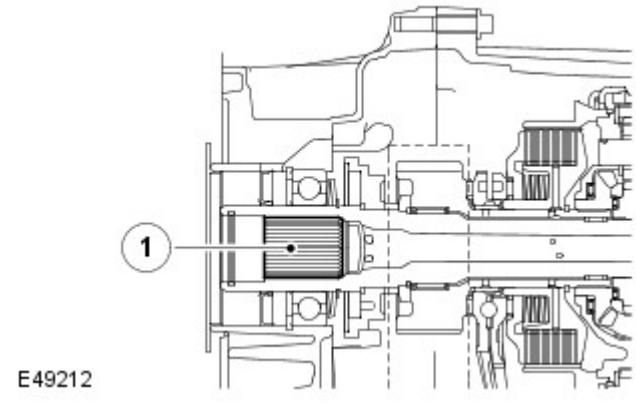

Item	Part Number	Description
1	-	Input shaft spline

DIAGNOSTICS

The transfer box control module can store fault codes, which can be retrieved using T4 or a diagnostic tool using KW2000* protocol.

The information is communicated via a diagnostic socket.

The diagnostic socket allows the exchange of information between the various control modules on the bus systems and T4 or another suitable diagnostic tool. The information is communicated to the socket via the CAN bus. This allows the retrieval of diagnostic information and programming of certain functions using T4 or another suitable diagnostic tool.

The transfer box control module uses Diagnostic Trouble Codes (DTC), which relate to transfer box electrical faults.

Clutch and Range Change Mechanism Calibration

In order for the range change mechanism to function correctly, the transfer box control module must be calibrated to the mechanical dimensions of the transfer box that it is connected to.

This procedure will need to be followed if one of the following occurs:

- The switch is changed
- The transfer box control module is changed
- The transfer box or range position sensor is changed
- Vehicle or transfer box control module fault has caused the transfer box to revert to an undefined range.

Calibration can be carried out using T4.

Manual Transmission Gear Learning Procedure

The transfer box control module contains an adaption that enables it to recognize which gear the driver has selected. The adaption has to be reset, by performing the gear learning procedure, if one of the following occurs:

- The transfer box control module is reprogrammed or replaced
- The manual transmission is replaced
- The gear position sensor is replaced

During the gear learning procedure the vehicle must be driven smoothly in all gears, with the clutch fully released in each gear, in a single drive cycle. The procedure can be performed with the transfer box in either high or low range.

Gear Learning Procedure

- If the gear learning procedure is to be performed because the manual transmission or the gear position sensor has been replaced, use T4 to set the gear adaption status to 0 in the transfer box control module.
- Start the vehicle.
- Drive in reverse gear and fully remove your foot from the clutch, drive in reverse with your foot off the clutch for 3 seconds and ensure that R is displayed in the instrument cluster.
- Drive in 1st gear and, when gear position 1 is displayed in the instrument cluster, change to the next gear. Continue driving, and changing up to the next gear once the current gear is displayed in the instrument cluster, until gear 6 is displayed in the instrument cluster, then stop the vehicle.
- Stop the engine, remove the ignition key and wait for a minimum of 60 seconds (for the transfer box control module to power down).
- Insert the ignition key and turn the ignition switch to position II (ignition).
- Select each gear in turn. If the appropriate gear position is displayed in the instrument cluster as soon as each gear is selected, the gear learning procedure has been successful. If the gear position is not displayed in the instrument cluster, the gear learning procedure has failed and must be repeated.
  - NOTE: T4 can also be used to check if the gear learning procedure has been successful.

SYSTEM OPERATION

The selection of high/low range is achieved by using a switch located behind the main transmission selection lever in the centre console. A range change can only be performed when the transmission selector lever is in neutral (position 'N' for vehicles with automatic transmission). The accelerator pedal must not be depressed when a range change is in progress.

If high or low range is requested and the transmission selector lever is in a position other than neutral, or 'N' or 'P' on a

vehicle with an automatic transmission, the instrument cluster message centre, if fitted, will display 'SELECT NEUTRAL FOR RANGE CHANGE'.

• NOTE: On vehicles with an automatic transmission, if the transmission selector lever is in the 'P' position, the range change will not take place and the 'SELECT NEUTRAL FOR RANGE CHANGE' message will not be displayed in the message centre.

When low range is selected, the low range 'mountain' symbol will flash when the range change is taking place and then remain illuminated when the range change is complete. The instrument cluster message centre, if fitted, will display 'LOW RANGE' for approximately 3 seconds followed by a chime from the instrument cluster to confirm that the range change has been completed. On vehicles with automatic transmission, only 'D' and 'Manual mode' are available, the 'Sport mode' selection is not available.

When high range is selected, the low range 'mountain' symbol will flash when the range change is taking place and then extinguish when the range change is complete. The instrument cluster message centre, if fitted, will display 'HIGH RANGE' for approximately 3 seconds followed by a chime from the instrument cluster to confirm that the range change has been completed.

The design of the transfer box allows range changes when the vehicle is moving, within set limitations as follows:

- High to Low – at speeds not exceeding 25 mph (40 km/h) for vehicles with automatic transmission, and 12 mph (20 km/h) for vehicles with manual transmission
- Low to High – at speeds not exceeding 37 mph (60 km/h).

If the vehicle speed is higher than the parameters given, the instrument cluster message centre, if fitted, will display 'SLOW DOWN'. When the correct speed range is reached, the message will be deleted and the range change will commence.

The transfer box control module interprets a road speed of less than 2 mph (3 km/h) as a static shift (vehicle not moving). In this instance, on vehicles with automatic transmission, the driver must use the shift lock procedure of operating the brake pedal to allow the selector lever to be moved from 'N' to 'D' after the range change has been performed.

High range should be used for all normal road driving and also for off-road driving across dry, level terrain. Low range should only be required where low speed manoeuvring is necessary, such as reversing a trailer, negotiating steep slippery surfaces or boulder-strewn terrain. Low range should also be used for extreme off-road conditions where progress in high range cannot be maintained. Low range should never be used for normal road driving.

Terrain Response™

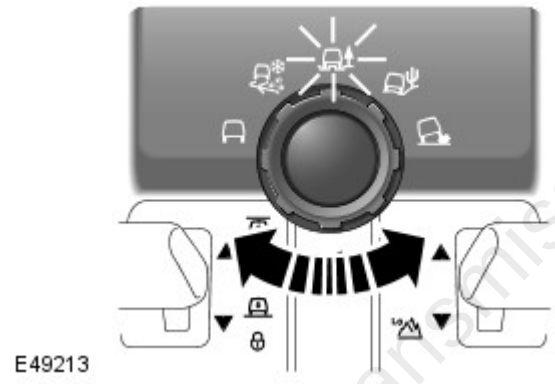

The Terrain Response™ system allows the driver to select a program, which will provide the optimum settings for traction and performance for the prevailing terrain conditions.

The system is controlled by a rotary control located on the centre console. The rotary control allows the selection of one of the following five programs:

- Special programs off (general driving conditions)
- Grass/Gravel/Snow
- Mud/Ruts
- Sand
- Rock crawl.

The Terrain Response™ system uses a combination of vehicle subsystems to achieve the required vehicle characteristics for the terrain selected. The following subsystems form the Terrain Response™ system:

- Engine management system
- Automatic transmission (if fitted)
- Transfer box
- Rear locking differential (if fitted)
- Brake system
- Air suspension.

Each subsystem control module provides a feedback for the selected program so that the Terrain Response™ control module can check that all systems are controlling the system correctly.
For additional information, refer to: Ride and Handling Optimization (204-06, Description and Operation).

HIGH RANGE OPERATION

In high range, the torque input from the transmission is passed to the transfer box input shaft. The position of the

synchroniser sleeve couples the shaft directly to the differential housing. The differential splits the torque between the two side gears. One side gear is connected by splines and passes the torque to the rear output flange. The second side gear is connected to the chain drive sprocket and passes the torque, via the chain, to the front output flange.

LOW RANGE OPERATION

In low range, the torque input from the transmission is passed to the transfer box input shaft. The synchroniser sleeve is moved and connects the planetary carrier to the differential housing. The torque from the transmission is now directed through the sun gear of the epicyclic gearset and, via the pinion gears and pinion gear shafts, into the planetary carrier. The annulus gear of the epicyclic gearset is secured inside the casing and generates the low range ratio of 2.93:1. The torque is then passed, via the synchroniser sleeve, to the differential housing where it is split between the two side gears. One side gear is connected by splines and passes the torque to the rear output flange. The second side gear is connected to the chain drive sprocket and passes the torque, via the chain, to the front output flange.

HIGH/LOW RANGE GEARS WITH SHIFT-ON-THE-MOVE

The driver is able to change between high and low range gears while the vehicle is moving, or if the vehicle is stationary.

Pushing the range change lever makes a range change requests. This lever is located on the centre console behind and to one side of the main transmission lever.

The driver requests a high to low range change by pushing the range change lever towards the rear of the vehicle and, conversely, a low to high request by pushing the lever towards the front of the vehicle. The range change lever is centre sprung and therefore does not latch in the forward or rear positions.

The driver is informed of the range status via a green lamp (mountain symbol) in the instrument cluster and LED's next to the range change lever. The lamp will not be illuminated in high range, illuminated in low range and flashing during a range change. There are two LED's on the range change lever one for high and one for low. During a range change the new range LED will flash.

The vehicle will remain in the selected range unless the driver requests a change, i.e. it will not automatically revert to high range following a key off/key on sequence.

RANGE CHANGE PROCEDURE (AUTOMATIC VEHICLES ONLY)

Neutral must be selected on the main transmission before requesting a range change and then select the appropriate gear following completion of the range change. During the range change the main transmission will be locked in neutral.

If neutral is not selected when a range change is requested then the request is denied and the driver will be advised to select neutral via the instrument cluster message centre (if fitted).

The range change process can take up to one second to complete following a request being accepted.

There is a limit set on the maximum speed at which a range change can be achieved. The maximum speed for a high to low range change is 25 mph (40 km/h) for vehicles with automatic transmission, and 12 mph (20 km/h) for vehicles with manual transmission. The maximum speed for a low to high range change is 37 mph (60 km/h). If the vehicle speed is over the limit when a range change is selected then the request is denied and the instrument cluster message centre (if fitted) will display a 'SLOW DOWN' message.

RANGE CHANGE PROCEDURE (MANUAL VEHICLES ONLY)

Neutral must be selected on the main transmission before requesting a range change and then select the appropriate gear following completion of the range change. During the range change the driver must not attempt to move the main transmission out of neutral. If the lever is moved out of neutral then the range change will stop and will be completed only when the driver re-selects neutral on the main transmission. This must be done to prevent damage to the transfer box mechanism.

The speed limit for shift-on-the-move for the manual vehicle is set lower than for the auto, at around 12 mph (20 km/h) for high to low and 37 mph (60 km/h) for low to high. The lower limits are set so that, if the driver tries to select too lower gear following a range change, no damage is caused to the vehicle.

TRANSFER BOX CONTROL DIAGRAM

- NOTE: A = Hardwired; D = CAN bus

transmissionmanuals.com

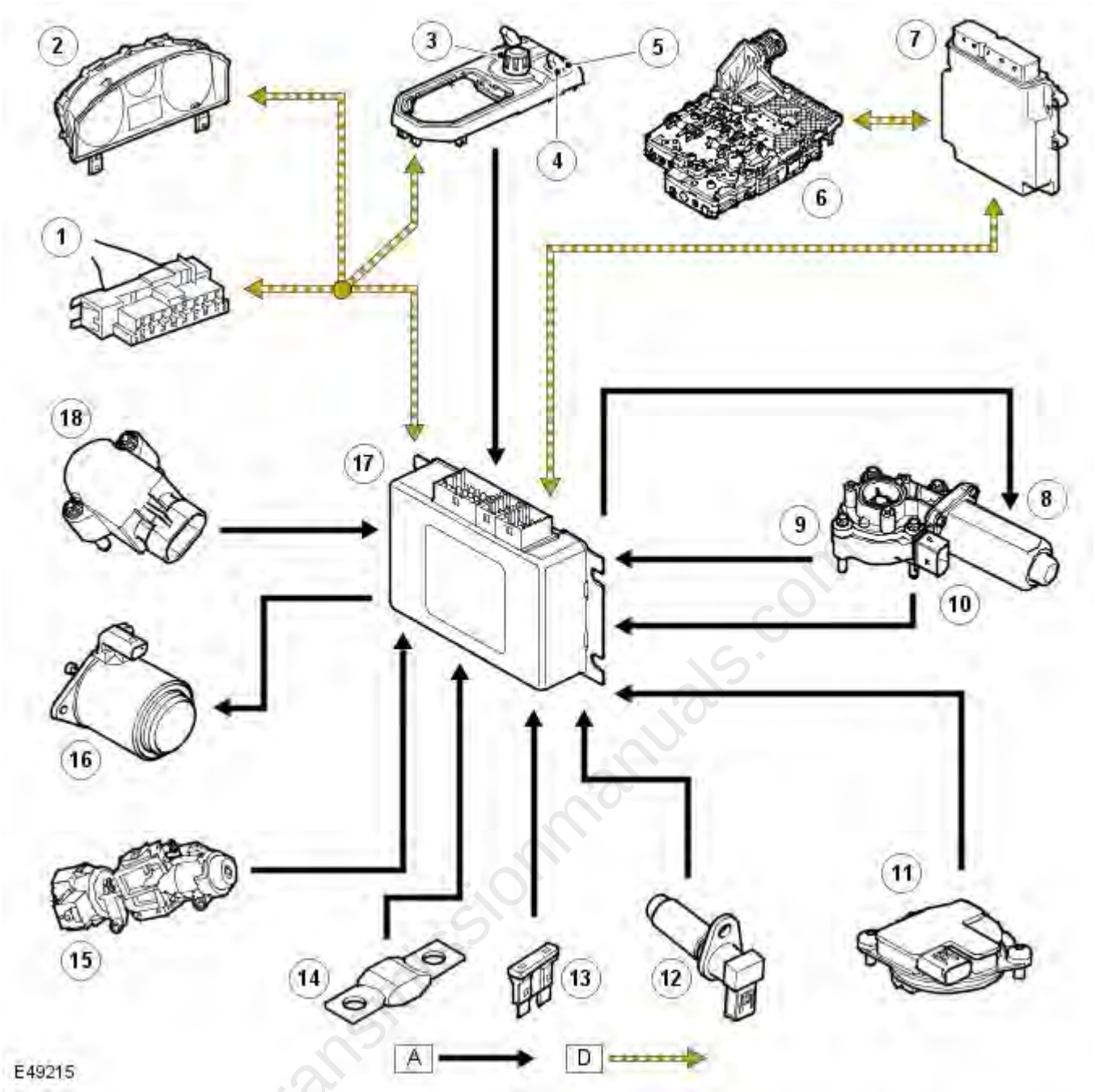

Item	Part Number	Description
1	-	Diagnostic socket
2	-	Instrument cluster
3	-	Terrain response™
4	-	High/Low range selection switch
5	-	High/Low range LED
6	-	Transmission Control Module (TCM)
7	-	Engine Control Module (ECM)
8	-	Transfer box motor
9	-	Temperature sensor
10	-	Hall sensors (speed and direction)
11	-	Manual transmission gear position sensor
12	-	Output shaft speed sensor
13	-	Fuse 24 ignition feed
14	-	Fusible link permanent battery feed
15	-	Ignition switch
16	-	Solenoid
17	-	Transfer box control module
18	-	High/low position sensor

Published: 11-May-2011

Four-Wheel Drive Systems - Four-Wheel Drive (4WD) Control Module

Removal and Installation

Removal

- NOTE: LHD illustration shown, RHD is similar.

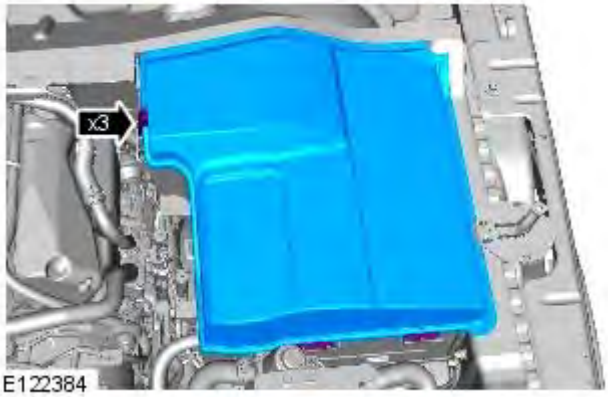

1. Remove drivers side plenum box lid.

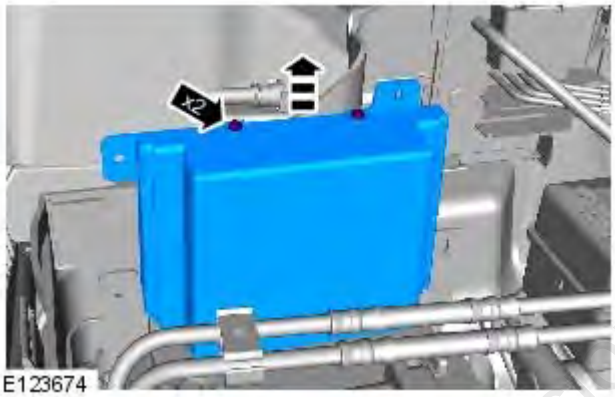

2. Remove the four-wheel drive control module cover.

- Remove the 2 bolts.

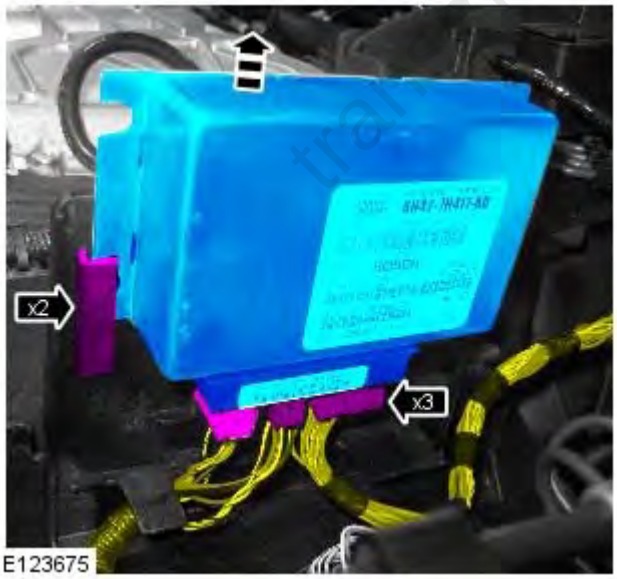

3. Release and remove the four-wheel drive control module.

- Disconnect the 3 electrical connectors.

Installation

1. To install, reverse the removal procedure.
2. Using the diagnostic tool, configue the new units using the Programmable Module Installation Routine.

transmissionmanuals.com

transmissionmanuals.com

Published: 11-May-2011

Four-Wheel Drive Systems - Transfer Case Shift Motor

Removal and Installation

Removal

1. WARNING: Make sure to support the vehicle with axle stands.

   Raise and support the vehicle.

2. Remove the transmission crossmember.
   For additional information, refer to: Transmission Support Crossmember - V8 5.0L Petrol (502-02 Full Frame and Body Mounting, Removal and Installation) / Transmission Support Crossmember - TDV6 3.0L Diesel (502-02 Full Frame and Body Mounting, Removal and Installation) / Transmission Support Crossmember - V6 4.0L Petrol/TDV6 2.7L Diesel (502-02 Full Frame and Body Mounting, Removal and Installation).

3. CAUTIONS:

   To avoid damage to the joints or gaiters, do not allow the transmission to hang on the driveshafts.

   Discard the bolts.

   Remove the shift motor.

   - Lower the rear of the transmission for access.
   - Disconnect the electrical connector.
   - Remove the 4 Torx bolts.

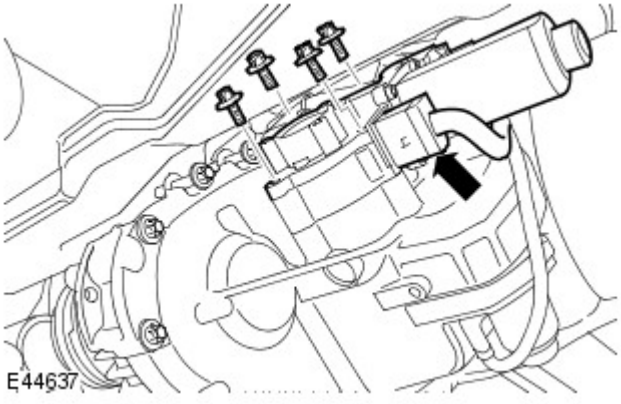

Installation

1. CAUTION: Make sure that new bolts are installed.

   Install the shift motor.

   - Clean the components.
   - Tighten the Torx bolts to 25 Nm (18 lb.ft).
   - Connect the electrical connector.

2. Install the transmission crossmember.
   For additional information, refer to: Transmission Support Crossmember - V8 5.0L Petrol (502-02 Full Frame and Body Mounting, Removal and Installation) / Transmission Support Crossmember - TDV6 3.0L Diesel (502-02 Full Frame and Body Mounting, Removal and Installation) / Transmission Support Crossmember - V6 4.0L Petrol/TDV6 2.7L Diesel (502-02 Full Frame and Body Mounting, Removal and Installation).

3. Calibrate a new transfer case shift motor using the diagnostic tool.

transmissionmanuals.com

Published: 11-May-2011

Four-Wheel Drive Systems - Transfer Case Clutch Solenoid

Removal and Installation

Removal

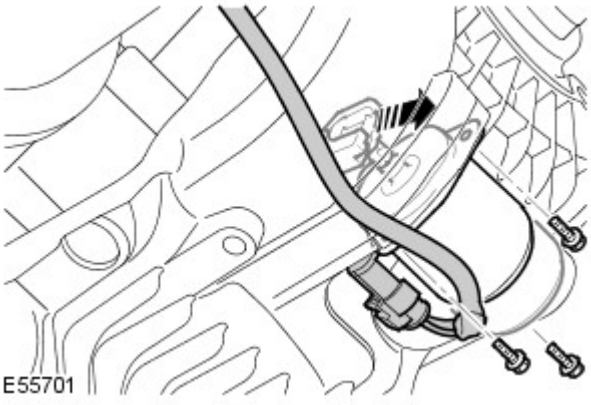

1. WARNING: Make sure to support the vehicle with axle stands.

Raise and support the vehicle.

2. CAUTIONS:

Connect the diagnostic tool, prior to removal of the solenoid.

Discard the bolts.

• NOTE: Some fluid spillage is inevitable during this operation.

Remove the transfer case clutch solenoid.

- Position a container to collect the fluid spillage.
- Remove the 3 Torx screws.
- Use the diagnostic tool to energise the solenoid.
- Detach from the selector lever.
- Disconnect the electrical connector.

Installation

1. WARNING: The transfer case clutch solenoid must be energised prior to installation to the selector lever. Failure to follow this instruction may result in damage to the transfer case.

• CAUTIONS:

Make sure the seal is installed correctly.

Make sure that new bolts are installed.

Install the transfer case clutch solenoid.

- Clean the components.
- Connect the electrical connector.
- Use the diagnostic tool to energise the solenoid.
- Install to the selector lever.
- Tighten the Torx screws to 10 Nm (7 lb.ft).

2. Check and top-up the transfer case fluid level.

3. Using the diagnostic tool, calibrate the new transfer case control solenoid.

transmissionmanuals.com

Published: 11-May-2011

Four-Wheel Drive Systems - High/Low Range Sensor

Removal and Installation

Removal

1. WARNING: Make sure to support the vehicle with axle stands.

Raise and support the vehicle.

2. Remove the crossmember.
For additional information, refer to: Transmission Support Crossmember - V8 5.0L Petrol (502-02 Full Frame and Body Mounting, Removal and Installation) / Transmission Support Crossmember - TDV6 3.0L Diesel (502-02 Full Frame and Body Mounting, Removal and Installation) / Transmission Support Crossmember - V6 4.0L Petrol/TDV6 2.7L Diesel (502-02 Full Frame and Body Mounting, Removal and Installation).

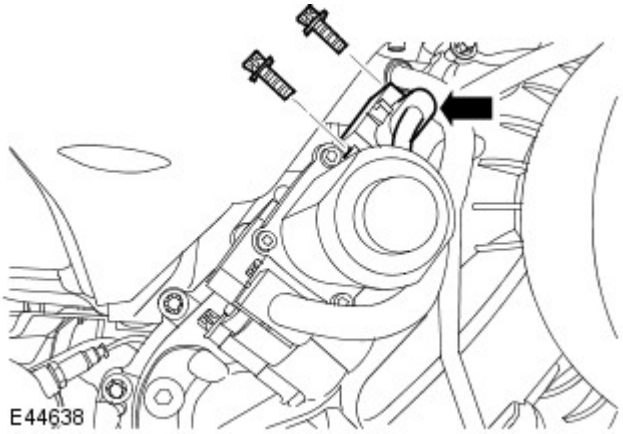

3. CAUTIONS:

To avoid damage to the joints or gaiters, do not allow the transmission to hang on the driveshafts.

Discard the bolts.

Remove the high/low range sensor.

- Lower the rear of the transmission for access.
- Disconnect the electrical connector.
- Remove the 2 Torx bolts.

Installation

1. CAUTION: Make sure that new bolts are installed.

To install, reverse the removal procedure.

- Clean the components.
- Install the high/low range sensor.
- Tighten the Torx bolts to 10 Nm (7 lb.ft).

2. Install the crossmember.
For additional information, refer to: Transmission Support Crossmember - V8 5.0L Petrol (502-02 Full Frame and Body Mounting, Removal and Installation) / Transmission Support Crossmember - TDV6 3.0L Diesel (502-02 Full Frame and Body Mounting, Removal and Installation) / Transmission Support Crossmember - V6 4.0L Petrol/TDV6 2.7L Diesel (502-02 Full Frame and Body Mounting, Removal and Installation).

3. Using the diagnostic tool, calibrate a new high/low range sensor.

transmissionmanuals.com